EX Series Redundant Power System Hardware Guide

Modified: 2017-06-13

Juniper Networks, Inc.
1133 Innovation Way
Sunnyvale, California 94089
USA
408-745-2000
www.juniper.net

EX Series Redundant Power System Hardware Guide

The information in this document is current as of the date on the title page.

YEAR 2000 NOTICE

Juniper Networks hardware and software products are Year 2000 compliant. Junos OS has no known time-related limitations through the year 2038. However, the NTP application is known to have some difficulty in the year 2036.

END USER LICENSE AGREEMENT

The Juniper Networks product that is the subject of this technical documentation consists of (or is intended for use with) Juniper Networks software. Use of such software is subject to the terms and conditions of the End User License Agreement ("EULA") posted at http://www.juniper.net/support/eula.html. By downloading, installing or using such software, you agree to the terms and conditions of that EULA.

Table of Contents

List of Figures

List of Tables

About the Documentation

Documentation and Release Notes

To obtain the most current version of all Juniper Networks® technical documentation, see the product documentation page on the Juniper Networks website at http://www.juniper.net/techpubs/.

If the information in the latest release notes differs from the information in the documentation, follow the product Release Notes.

Juniper Networks Books publishes books by Juniper Networks engineers and subject matter experts. These books go beyond the technical documentation to explore the nuances of network architecture, deployment, and administration. The current list can be viewed at http://www.juniper.net/books.

Supported Platforms

For the features described in this document, the following platforms are supported:

- EX Series

Documentation Conventions

Table 1 on page xii defines notice icons used in this guide.

Table 1: Notice Icons

Icon	Meaning	Description
	Informational note	Indicates important features or instructions.
	Caution	Indicates a situation that might result in loss of data or hardware damage.
	Warning	Alerts you to the risk of personal injury or death.
	Laser warning	Alerts you to the risk of personal injury from a laser.
	Tip	Indicates helpful information.
	Best practice	Alerts you to a recommended use or implementation.

Table 2 on page xii defines the text and syntax conventions used in this guide.

Table 2: Text and Syntax Conventions

Convention	Description	Examples
Bold text like this	Represents text that you type.	To enter configuration mode, type the **configure** command: user@host> **configure**
`Fixed-width text like this`	Represents output that appears on the terminal screen.	`user@host>` **show chassis alarms** `No alarms currently active`
Italic text like this	• Introduces or emphasizes important new terms. • Identifies guide names. • Identifies RFC and Internet draft titles.	• A policy *term* is a named structure that defines match conditions and actions. • *Junos OS CLI User Guide* • RFC 1997, *BGP Communities Attribute*
Italic text like this	Represents variables (options for which you substitute a value) in commands or configuration statements.	Configure the machine's domain name: [edit] root@# **set system domain-name** *domain-name*

Table 2: Text and Syntax Conventions *(continued)*

Convention	Description	Examples
Text like this	Represents names of configuration statements, commands, files, and directories; configuration hierarchy levels; or labels on routing platform components.	• To configure a stub area, include the **stub** statement at the **[edit protocols ospf area area-id]** hierarchy level. • The console port is labeled **CONSOLE**.
< > (angle brackets)	Encloses optional keywords or variables.	**stub <default-metric *metric*>;**
| (pipe symbol)	Indicates a choice between the mutually exclusive keywords or variables on either side of the symbol. The set of choices is often enclosed in parentheses for clarity.	**broadcast | multicast** **(*string1* | *string2* | *string3*)**
# (pound sign)	Indicates a comment specified on the same line as the configuration statement to which it applies.	**rsvp { # Required for dynamic MPLS only**
[ ] (square brackets)	Encloses a variable for which you can substitute one or more values.	**community name members [*community-ids*]**

Indention and braces ({ })	Identifies a level in the configuration hierarchy.	[edit]
		routing-options {
		static {
		route default {
		nexthop *address*;
		retain;
		}
		}
		}

; (semicolon)	Identifies a leaf statement at a configuration hierarchy level.	
GUI Conventions		
Bold text like this	Represents graphical user interface (GUI) items you click or select.	• In the Logical Interfaces box, select **All Interfaces**. • To cancel the configuration, click **Cancel**.
> (bold right angle bracket)	Separates levels in a hierarchy of menu selections.	In the configuration editor hierarchy, select **Protocols>Ospf**.

Documentation Feedback

We encourage you to provide feedback, comments, and suggestions so that we can improve the documentation. You can provide feedback by using either of the following methods:

- Online feedback rating system—On any page of the Juniper Networks TechLibrary site at http://www.juniper.net/techpubs/index.html, simply click the stars to rate the content, and use the pop-up form to provide us with information about your experience. Alternately, you can use the online feedback form at http://www.juniper.net/techpubs/feedback/.

- E-mail—Send your comments to **techpubs-comments@juniper.net**. Include the document or topic name, URL or page number, and software version (if applicable).

Requesting Technical Support

Technical product support is available through the Juniper Networks Technical Assistance Center (JTAC). If you are a customer with an active J-Care or Partner Support Service support contract, or are covered under warranty, and need post-sales technical support, you can access our tools and resources online or open a case with JTAC.

- JTAC policies—For a complete understanding of our JTAC procedures and policies, review the *JTAC User Guide* located at http://www.juniper.net/us/en/local/pdf/resource-guides/7100059-en.pdf.
- Product warranties—For product warranty information, visit http://www.juniper.net/support/warranty/.
- JTAC hours of operation—The JTAC centers have resources available 24 hours a day, 7 days a week, 365 days a year.

Self-Help Online Tools and Resources

For quick and easy problem resolution, Juniper Networks has designed an online self-service portal called the Customer Support Center (CSC) that provides you with the following features:

- Find CSC offerings: http://www.juniper.net/customers/support/
- Search for known bugs: http://www2.juniper.net/kb/
- Find product documentation: http://www.juniper.net/techpubs/
- Find solutions and answer questions using our Knowledge Base: http://kb.juniper.net/
- Download the latest versions of software and review release notes: http://www.juniper.net/customers/csc/software/
- Search technical bulletins for relevant hardware and software notifications: http://kb.juniper.net/InfoCenter/
- Join and participate in the Juniper Networks Community Forum: http://www.juniper.net/company/communities/
- Open a case online in the CSC Case Management tool: http://www.juniper.net/cm/

To verify service entitlement by product serial number, use our Serial Number Entitlement (SNE) Tool: https://tools.juniper.net/SerialNumberEntitlementSearch/

Opening a Case with JTAC

You can open a case with JTAC on the Web or by telephone.

- Use the Case Management tool in the CSC at http://www.juniper.net/cm/.
- Call 1-888-314-JTAC (1-888-314-5822 toll-free in the USA, Canada, and Mexico).

For international or direct-dial options in countries without toll-free numbers, see http://www.juniper.net/support/requesting-support.html.

PART 1

Overview

CHAPTER 1

System Overview

EX Series Redundant Power System Hardware Overview

The Redundant Power System (RPS) can be used to provide backup power for Juniper Networks EX2200 Ethernet Switches, (except Juniper Networks EX2200-C Ethernet Switches) and Juniper Networks EX3300 Ethernet Switches that are standalone switches or are members of a Virtual Chassis.

Most EX Series switches have a built-in capability for redundant power supplies—therefore, if one power supply fails on those switches, the other power supply takes over. However, EX2200 switches and EX3300 switches have only one internal fixed power supply. If an EX2200 switch or EX3300 switch is deployed in a critical situation, we recommend that you connect a an RPS to that switch to supply backup power during a loss of power.

RPS is not a primary power supply—it only provides backup power to switches when the single dedicated power supply fails. An RPS operates in parallel with the single dedicated power supplies of the switches connected to it and provides all connected switches enough power to support either Power over Ethernet (PoE) or non-PoE devices when the power supplies on the switches fail..

An RPS can hold up to three power supplies connected to as many as six switches—how that power is allocated is up to you. You determine whether or not to connect switches that provide PoE and you determine which switches have priority. Priority becomes an issue when you connect more than three switches that provide PoE to a fully loaded RPS because a switch providing PoE requires more power than a switch that does not provide PoE. Because a power supply can support only one switch providing PoE, the RPS can become oversubscribed when too many switches that must have enough power for PoE have a power failure.

This topic describes:

- Switch Models and Configurations Supported by the RPS on page 4
- When a Switch's Power Supply Fails on page 5
- Components of the RPS on page 6

Switch Models and Configurations Supported by the RPS

The RPS supports all EX3300 switches and EX2200 switches except EX2200-C switches. You can simultaneously connect any supported switches to the same RPS, whether the switches are standalone switches or are configured in a Virtual Chassis.

All power provided by RPS is either PoE or non-PoE. By default, RPS supports switches that provide PoE. If even one switch provides PoE, then the RPS must be configured to provide enough power for PoE. When enough power for PoE is supplied, one switch can be powered by each power supply. If the switches are not providing PoE power, two switches can be powered by one RPS power supply—you can reconfigure an RPS to provide non-PoE power using a feature called multi-backup.

Table 3 on page 5 lists some possible scenarios and RPS solutions. These examples assume that each RPS is fully loaded with three power supplies.

Table 3: Sample Requirements and RPS Solutions

Switches Requiring Backup	You need this RPS configuration:
Six switches that do not provide PoE to attached devices	One RPS can simultaneously provide power to all six switches if you change the power default to multi-backup—this indicates that no attached switch provides PoE to any devices.
One switch that provides PoE to other devices or two switches that do not provide PoE to any devices	One RPS will always back up all three switches, whether or not they provide PoE to connected devices. Leave the power at the default setting (no multi-backup) and let RPS determine that two switches need only minimum power and one switch provides PoE and therefore needs extra power. RPS automatically supplies the correct level of power.
One EX Series Virtual Chassis member that supplies PoE, one switch that supplies PoE, and one switch that does not supply PoE to any connected devices	One RPS will always back up all three switches. Leave the power default setting (no multi-backup) and let RPS determine that one switch needs only minimum power, one switch needs extra power because it supplies PoE, and the Virtual Chassis member also provides PoE to connected devices.
One switch that supplies PoE and five switches that do not supply PoE	You have two options. Option 1—Use one RPS: Up to three switches that do or do not supply PoE can be backed up simultaneously. You can prioritize the six switches to determine which three are most important if all six fail at once. You must leave the power default setting (no multi-backup) because you have one switch that supplies PoE to attached devices and therefore requires more power. Option 2—Use Two RPSs: In this case, you can connect three switches to each RPS and all switches will be backed up if they all fail at once. Alternatively, you can change the power default to multi-backup on one RPS and connect all five switches that do not supply PoE to that RPS, leaving the other RPS to back up the switch that supplies PoE.
EX Series Virtual Chassis	Use as many RPSs as needed to back up all members of the Virtual Chassis.

When a Switch's Power Supply Fails

Because the power supplies for both EX3300 switches and EX2200 switches are internal, if the switch's power supply fails, you must replace the switch. You should remove or replace a switch with a failed power supply as soon as possible.

Do not try to use an RPS as a primary power supply because an RPS cannot boot or reboot a switch. Each switch connected to the RPS must have its own dedicated power supply and must have booted up using the internal power supply.

If a switch is deployed in a large network center where RPS has a separate source of electricity than the switches it supports, the RPS supplies power when only the switch's electricity fails. In this case, you would not have to replace the switch because the power supply is still functional. An EX3300 switch will resume using its own internal power supply when electricity to the switch is restored. However, an EX2200 switch operates differently—once the RPS is supplying power, the switch does not automatically resume using its own internal power supply when power is restored to it.

Components of the RPS

Table 4 on page 6 lists and describes the components of an RPS:

Table 4: Redundant Power System Components

Component	Value
Power supplies that can be installed	Up to three EX-PWR3-930-AC power supplies. One is included and additional power supplies must be ordered separately.
Switch connector ports on RPS	6 (2 per power supply)
Power cords (for connecting power supplies to the AC power source outlet)	Up to three power cords, one per power supply.
RPS cables (for connecting a switch to a power supply installed in the RPS)	6 (1 for each RPS-to-switch connection). One cable is supplied with the RPS. Additional cables must be ordered separately.

Related Documentation

- Physical Description of a Redundant Power System on page 8
- Chassis Physical Specifications for the EX Series Redundant Power System on page 11
- Determining and Setting Priority for Switches Connected to an EX Series RPS on page 47
- Installing a Power Supply in the EX Series Redundant Power System on page 53

Understanding How Power Priority Is Determined and Set for Switches Connected to the EX Series Redundant Power System

The Redundant Power System (RPS) is designed to provide backup power to switches that lack built-in redundant power supplies. The RPS provides backup power to switches that either supply power over Ethernet (PoE), which require more power, or switches that do not supply PoE, which require less power. A power supply can either power one PoE device or two non-PoE devices. That means if an RPS is fully loaded with three power supplies, supports PoE switches, and more than three PoE switches have a power failure, some switches will not be powered. You can, however, determine which switches will be powered when an RPS is oversubscribed. When too many connected switches fail, the switches are given power based on their priority. Priority is also reconfigured when any power change takes place. For example, if three switches are already being backed up and another switch has a power failure, the RPS detects this, reconfigures the current top priorities, and allots power accordingly.

- Default RPS Priority on page 7
- Changing the Priority of Switches on an EX Series RPS on page 7

Default RPS Priority

While six non-PoE switches can all simultaneously be backed up with three power supplies, only three PoE switches can be backed up (because PoE uses more power). This means that an RPS with four or more PoE switches connected will have to select three of them for backup. You can determine priority by the connector positions you use to connect the switches. By default, an RPS assigns priority to switches based on their switch connector port location, with the leftmost port having the lowest priority and the rightmost port having the highest priority. If the PoE switches shown in Figure 1 on page 7 all fail, the manufacturing, support, and finance switches will be backed up because they are connected to the rightmost connectors.

Figure 1: Default PoE Switch Priority Is Determined by Connector Port Location

Changing the Priority of Switches on an EX Series RPS

There is a way to alter the priority of PoE switches on an RPS without disconnecting the cables. You can optionally reconfigure any of the attached switches from their CLIs to establish a switch's RPS priority—this CLI configuration overcomes the priority determined by the switch connector port location. Priority ranges from zero (off) to 1 (lowest) through 6 (highest). By default, all switches are configured to 1, the lowest priority. Let's say that the sales switch is reconfigured from the switch's CLI for priority 5 (second highest).

Now in Figure 2 on page 7, with the sales switch configured for RPS 5 from the CLI, the highest priority changes to sales (because 5 is higher than 1), then manufacturing, and then support.

Figure 2: Switch Priority After CLI Configuration

When assigning power priority to switches by using the CLI on the switch, keep these points in mind:

- By default, all switches are assigned priority 1 (lowest) and derive precedence from the location of their connector port on the RPS, with the rightmost port having highest priority.
- Priority 0 assigned from a switch CLI means that the RPS does not provide any backup power to the switch. Essentially, this turns off RPS support.
- Priority 6 assigned from a switch CLI is the highest priority and priority 1 is the lowest priority.
- The CLI command that assigns priority to EX2200 switches is slightly different from the CLI command that assigns priority to EX3300 switches because EX3300 switches can be configured as a Virtual Chassis.

- If two or more switches are assigned the same priority value from the switches' CLIs , then the power priority for those switches is determined by the RPS switch connector port location, with the ports to the right receiving priority.
- If a single power supply is installed, the RPS can provide backup power to one switch out of all the switches connected to the RPS. If you do not need any PoE power backup on any switch, you can increase the number of supported switches to two per power supply. Switches connected to an RPS must be either all PoE or all non-PoE.
- The RPS discontinues supplying backup power to a lower-priority switch if it detects a backup power need for a higher-priority switch at the same time.

Related Documentation

- Determining and Setting Priority for Switches Connected to an EX Series RPS on page 47

Physical Description of a Redundant Power System

The Redundant Power System (RPS) has no traditional "front" or "back" because you can position either the side with the power supply slots or the side with the switch connectors at the front of the rack. If you want the status to be displayed in the front of the rack, position the power supply side in the front—it has the status LEDs on it.

This topic describes:

- Power Supply Side of a Redundant Power System on page 8
- Switch Connector Side of a Redundant Power System on page 9

Power Supply Side of a Redundant Power System

The power supply side of the RPS includes:

- Eight LEDs:
  - One SYS LED to indicate the status of the RPS
  - One ALM LED to indicate the failure (when the LED is lit) of an RPS power supply fan
  - Six status LEDs (labeled 0 through 5) to indicate the functional status of the six switch connector ports (one LED for each switch connector port)
- Three power supply slots to accommodate the power supplies required by the RPS. The left and right power supply slots have cover panels.
- The RJ-45 connector management port, which is used to upgrade RPS firmware
- Protective earthing terminal used to connect to a grounded object

Figure 3 on page 9 shows the power supply side of an RPS.

Figure 3: Power Supply Side of the RPS

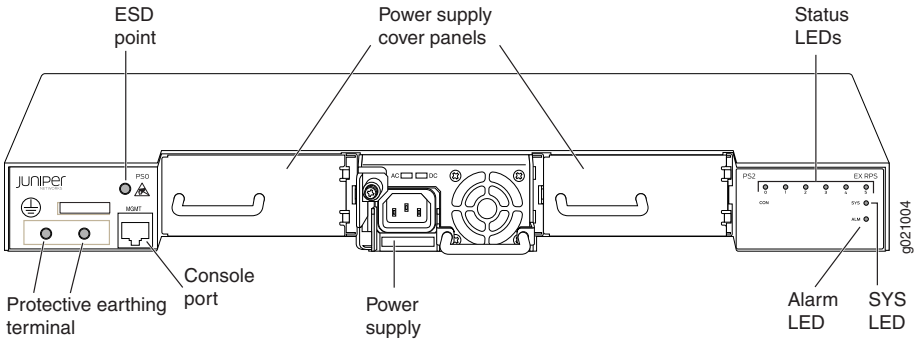

Switch Connector Side of a Redundant Power System

The switch connector side of the RPS has six switch connector ports (labeled 0 through 5).

Figure 4 on page 9 shows the switch connector side of an RPS with Port 0 covered.

Figure 4: Switch Connector Side of the RPS

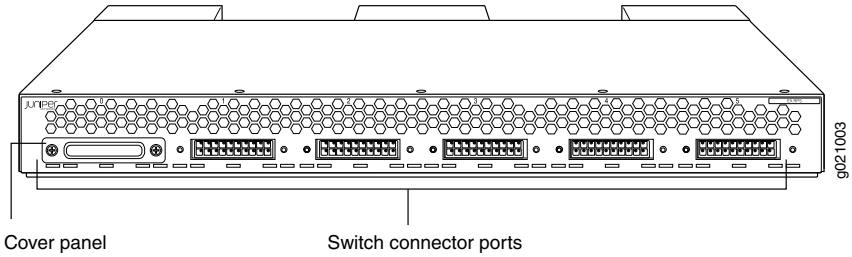

NOTE: All switch connector ports have cover panels on them. We recommend that you retain the cover panels on switch connector ports that are not in use.

Related Documentation

- EX Series Redundant Power System Hardware Overview on page 4
- Chassis Physical Specifications for the EX Series Redundant Power System on page 11
- Site Preparation Checklist for an EX Series Redundant Power System on page 17
- Determining and Setting Priority for Switches Connected to an EX Series RPS on page 47
- Installing a Power Supply in the EX Series Redundant Power System on page 53
- LEDs on an EX Series Redundant Power System on page 11

CHAPTER 2

Chassis Components and Descriptions

Chassis Physical Specifications for the EX Series Redundant Power System

Table 5 on page 11 summarizes the physical specifications of the RPS chassis.

Table 5: Physical Specifications of the RPS Chassis

Description	Value
Chassis height	1.75 in. (4.45 cm)
Chassis width	• 17.25 in (43.82 cm) • 19 in. (48.2 cm) with mounting brackets attached
Chassis depth	• 19.75 in. (50.17 cm) with one or more RPS power supplies installed
Weight	• An RPS without any RPS power supply weighs 11.0 lb (5.0 kg) • Each power supply weighs 1.6 lbs. A fully configured RPS with three RPS power supplies installed weighs 19.6 lb (8.9 kg)

You can mount the RPS chassis on a two-post or a four-post 19-in. equipment rack or cabinet by using mounting brackets. The RPS ships with mounting brackets and screws to be used to secure the chassis to a rack or cabinet rails.

Related Documentation

- Rack Requirements on page 20
- Cabinet Requirements on page 21
- Mounting the EX Series Redundant Power System on page 33

LEDs on an EX Series Redundant Power System

The power supply side of a Redundant Power System (RPS) has eight LEDs at the right end. The six status LEDs (labeled 0 through 5) indicate the status of the switch connector ports. The SYS LED and the ALM LED indicate the RPS status and the RPS power supply fan status respectively (see Figure 5 on page 12).

Figure 5: LEDs on an RPS

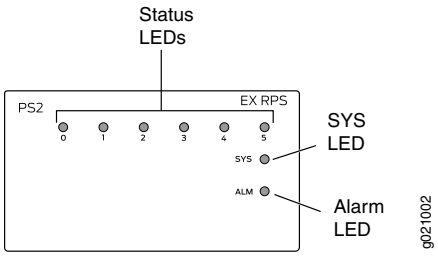

Table 6 on page 12 describes the LEDs in an RPS, their colors and states, and the status they indicate.

Table 6: LEDs on an RPS

LED	Color	State and Description
SYS (System)	Green	• Blinking—The RPS is booting. • On steadily—The RPS is on. • Off—The RPS is off.
	Amber	A power supply has failed.
ALM (Alarm)	Green	All fans in the RPS power supplies are operating normally.
	Amber	There is a fan failure in at least one RPS power supply. Determine which fan has failed by using the CLI command **show redundant-power-system led** from a connected switch CLI.
Status of connector ports (0 – 5)	Green	• On steadily—The RPS connector is enabled and connected to a switch, but the RPS is not actively providing backup power to the switch. • Blinking—The RPS is providing backup power to the switch connected to the port. • Off—The RPS connector is either connected but not enabled (status of connection is 0) or not physically connected to a switch.
	Amber	No power is supplied to the switch on this connector, possibly because another switch with higher priority has lost power.

The switch connector ports (labeled 0 through 5) on the switch connector side are mapped to the status LEDs (labeled 0 through 5) on the power supply side.

Related Documentation

- Physical Description of a Redundant Power System on page 8

CHAPTER 3

Power Supplies

Power Supply in an EX Series Redundant Power System

The Redundant Power System (RPS) itself has no power outlet—it derives power from installed EX-PWR3-930-AC power supplies. The RPS accommodates up to three hot-insertable and hot-removable field-replaceable unit (FRU) power supplies to provide enough power to switches that need to support either power over Ethernet (PoE) or non-PoE backup power to devices. By default, one RPS power supply is set to power one switch with enough power to either support one PoE switch, which requires more power or one non-PoE switch that requires less power. You can modify this configuration so that an RPS supplies non-PoE power to two switches per power supply with the command **request redundant-power-system multi-backup**. Keep in mind that this setting applies to all power from the RPS—you cannot configure an individual power supply.

CAUTION: **The RPS operates only when a power supply is present in the middle slot.**

Each EX-PWR3-930-AC power supply has an internal fan and two LEDs—AC OK and DC OK. AC indicates the status of power input from the electrical outlet and DC indicates the status of power output to a switch.

Figure 6 on page 14 shows the EX-PWR3-930-AC power supply supported by RPS. Other power supplies may look similar, but only the EX-PWR3-930-AC power supply is supported.

Figure 6: EX-PWR3-930-AC Power Supply in a Redundant Power System

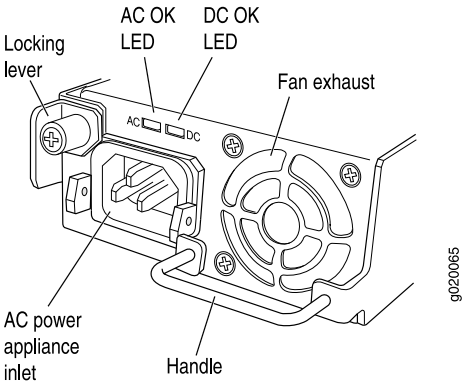

WARNING: To prevent electrical injuries, follow instructions in "Installing a Power Supply in the EX Series Redundant Power System" on page 53 and "Removing a Power Supply from the EX Series RPS" on page 55 carefully.

Related Documentation

- AC Power Cord Specifications for the EX Series Redundant Power System on page 25
- LEDs on an EX Series Redundant Power System on page 11
- Power Specifications for the EX Series Redundant Power System on page 25
- Prevention of Electrostatic Discharge Damage on page 129
- Power Supply LEDs in an EX Series Redundant Power System on page 14
- Connecting Power to an EX Series Redundant Power System Power Supply on page 41

Power Supply LEDs in an EX Series Redundant Power System

Each RPS power supply has two LEDs.

Table 7 on page 14 describes the status of LEDs on the RPS power supply.

Table 7: Power Supply LEDs in a Redundant Power System

LED	State and Description
AC OK	• Off—Power is not currently being input into this RPS power supply. • On—Power is currently being input into this RPS power supply.
DC OK	• Off—There is no power being output to a connected switch at this time. • On—Power is now being output to a connected switch.

Related Documentation

- Power Supply in an EX Series Redundant Power System on page 13
- EX Series Redundant Power System Hardware Overview on page 4

PART 2

Site Planning, Preparation, and Specifications

CHAPTER 4

Preparation Overview

Site Preparation Checklist for an EX Series Redundant Power System

The checklist in Table 8 on page 17 summarizes the tasks you need to perform when preparing a site for Redundant Power System (RPS) installation.

Table 8: Site Preparation Checklist

Item or Task	For More Information	Performed By	Date
Environment			
Verify that environmental factors such as temperature and humidity do not exceed the RPS tolerances.	*Environmental Requirements and Specifications for EX Series Switches*		
Power			
Measure the distance between external power sources and the RPS installation site to ensure that power cords are long enough.			
Locate sites for connection of system grounding.	"Site Electrical Wiring Guidelines" on page 19		
Calculate the power consumption and requirements.	"Power Specifications for the EX Series Redundant Power System" on page 25		
Hardware Configuration			

Table 8: Site Preparation Checklist *(continued)*

Item or Task	For More Information	Performed By	Date
Choose the switches that you want to connect and determine whether they require PoE or non-PoE power.	"EX Series Redundant Power System Hardware Overview" on page 4		
Rack or Cabinet			
Verify that the rack or cabinet meets the minimum requirements for the installation of the RPS.	"Rack Requirements" on page 20 "Cabinet Requirements" on page 21		
Plan the rack or cabinet location, including required space clearances.	"Clearance Requirements for Airflow and Hardware Maintenance for an EX Series Redundant Power System" on page 22		
Secure the rack or cabinet to the floor and building structure.			
AC Power Cords and RPS Cables			
For a list of parts supplied with the RPS, see "Parts Inventory (Packing List) for an EX Series Redundant Power System" on page 32 Set up the switches and RPS such that connections can be made using the RPS cables and power supply cords, each of which is 1.5 m long. Ensure that you have enough AC power cords and RPS cables: • Each power supply requires one power cord. • Each connected switch requires one RPS cable.			

Related Documentation

- General Safety Guidelines and Warnings on page 105
- General Site Guidelines on page 19
- Connecting Power to an EX Series Redundant Power System Power Supply on page 41
- Mounting the EX Series Redundant Power System on page 33

General Site Guidelines

Efficient device operation requires proper site planning and maintenance and proper layout of the equipment, rack or cabinet (if used), and wiring closet.

To plan and create an acceptable operating environment for your device and prevent environmentally caused equipment failures:

- Keep the area around the chassis free from dust and conductive material, such as metal flakes.
- Follow prescribed airflow guidelines to ensure that the cooling system functions properly and that exhaust from other equipment does not blow into the intake vents of the device.
- Follow the prescribed electrostatic discharge (ESD) prevention procedures to prevent damaging the equipment. Static discharge can cause components to fail completely or intermittently over time.
- Install the device in a secure area, so that only authorized personnel can access the device.

Related Documentation

- Prevention of Electrostatic Discharge Damage on page 129

Site Electrical Wiring Guidelines

Table 9 on page 19 describes the factors you must consider while planning the electrical wiring at your site.

WARNING: **It is particularly important to provide a properly grounded and shielded environment and to use electrical surge-suppression devices.**

Table 9: Site Electrical Wiring Guidelines

Site Wiring Factor	Guidelines
Signaling limitations	If your site experiences any of the following problems, consult experts in electrical surge suppression and shielding: • Improperly installed wires cause radio frequency interference (RFI). • Damage from lightning strikes occurs when wires exceed recommended distances or pass between buildings. • Electromagnetic pulses (EMPs) caused by lightning damage unshielded conductors and electronic devices.

Table 9: Site Electrical Wiring Guidelines *(continued)*

Site Wiring Factor	Guidelines
Radio frequency interference	To reduce or eliminate RFI from your site wiring, do the following: • Use a twisted-pair cable with a good distribution of grounding conductors. • If you must exceed the recommended distances, use a high-quality twisted-pair cable with one ground conductor for each data signal when applicable.
Electromagnetic compatibility	If your site is susceptible to problems with electromagnetic compatibility (EMC), particularly from lightning or radio transmitters, seek expert advice. Some of the problems caused by strong sources of electromagnetic interference (EMI) are: • Destruction of the signal drivers and receivers in the device • Electrical hazards as a result of power surges conducted over the lines into the equipment

Related Documentation

- General Safety Guidelines and Warnings on page 105
- General Electrical Safety Guidelines and Warnings on page 127
- Prevention of Electrostatic Discharge Damage on page 129

Rack Requirements

You can mount the device on two-post racks or four-post racks.

Rack requirements consist of:

- Rack type
- Mounting bracket hole spacing
- Rack size and strength
- Rack connection to the building structure

Table 10 on page 20 provides the rack requirements and specifications.

Table 10: Rack Requirements and Specifications

Rack Requirement	Guidelines
Rack type	You can mount the device on a rack that provides bracket holes or hole patterns spaced at 1 U (1.75 in. or 4.45 cm) increments and meets the size and strength requirements to support the weight. A U is the standard rack unit defined by the Electronics Industry Association.
Mounting bracket hole spacing	The holes in the mounting brackets are spaced at 1 U (1.75 in. or 4.45 cm), so that the device can be mounted in any rack that provides holes spaced at that distance.

Table 10: Rack Requirements and Specifications *(continued)*

Rack Requirement	Guidelines
Rack size and strength	• Ensure that the rack complies with the size and strength standards of a 19-in. rack as defined by the Electronics Industry Association. • Ensure that the rack rails are spaced widely enough to accommodate the external dimensions of the device chassis. The outer edges of the front-mounting brackets extend the width of the chassis to 19 in. (48.2 cm). • The rack must be strong enough to support the weight of the device. • Ensure that the spacing of rails and adjacent racks provides for proper clearance around the device and rack.
Rack connection to building structure	• Secure the rack to the building structure. • If earthquakes are a possibility in your geographical area, secure the rack to the floor. • Secure the rack to the ceiling brackets as well as wall or floor brackets for maximum stability.

Related Documentation

- Rack-Mounting and Cabinet-Mounting Warnings on page 116

Cabinet Requirements

You can mount the device in a cabinet that contains a 19-in. rack.

Cabinet requirements consist of:

- Cabinet size
- Clearance requirements
- Cabinet airflow requirements

Table 11 on page 21 provides the cabinet requirements and specifications.

Table 11: Cabinet Requirements and Specifications

Cabinet Requirement	Guidelines
Cabinet size	• You can mount the device in a cabinet that contains a 19-in. rack as defined by the Electronics Industry Association. • The minimum cabinet size must be able to accommodate the maximum external dimensions of the device.
Cabinet clearance	• The outer edges of the mounting brackets extend the width of the chassis to 19 in. (48.2 cm). • The minimum total clearance inside the cabinet is 30 in. (76.2 cm) between the inside of the front door and the inside of the rear door.

Table 11: Cabinet Requirements and Specifications *(continued)*

Cabinet Requirement	Guidelines
Cabinet airflow requirements	When you mount the device in a cabinet, ensure that ventilation through the cabinet is sufficient to prevent overheating. • Ensure adequate cool air supply to dissipate the thermal output of the device or devices. • Ensure that the hot air exhaust of the chassis exits the cabinet without recirculating into the device. An open cabinet (without a top or doors) that employs hot air exhaust extraction from the top ensures the best airflow through the chassis. If the cabinet contains a top or doors, perforations in these elements assist with removing the hot air exhaust. • Install the device in the cabinet in a way that maximizes the open space on the side of the chassis that has the hot air exhaust. • Route and dress all cables to minimize the blockage of airflow to and from the chassis. • Ensure that the spacing of rails and adjacent cabinets is such that there is proper clearance around the device and cabinet. • A cabinet larger than the minimum required provides better airflow and reduces the chance of overheating.

Related Documentation

- Rack-Mounting and Cabinet-Mounting Warnings on page 116

Clearance Requirements for Airflow and Hardware Maintenance for an EX Series Redundant Power System

When planning the site for installing a Redundant Power System (RPS), you must allow sufficient clearance around the installed unit (see Figure 7 on page 22).

Figure 7: Clearance Requirements for Airflow and Hardware Maintenance for an RPS

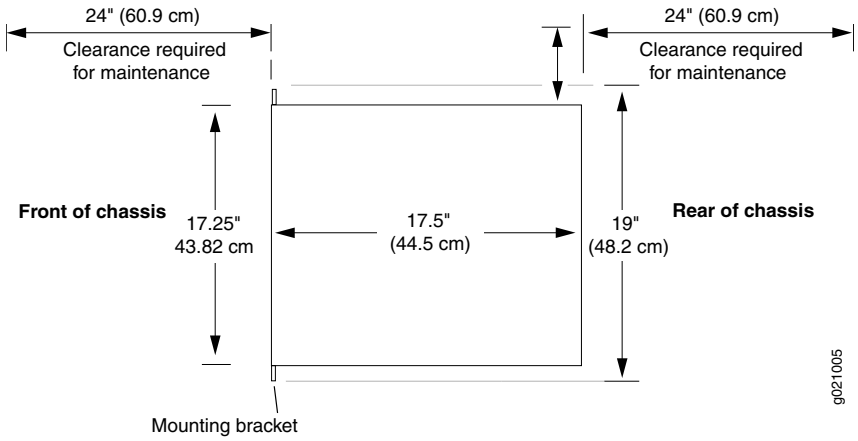

Airflow is established by the fans in the power supplies—these fans push air out of the power supply side of the RPS. Therefore, air flows from the connector side of the RPS through the unit and out the power supply side of the RPS. Ensure that cool air is available on the connector side of the RPS.

- If you are mounting an RPS on a rack or cabinet with other equipment, ensure that the exhaust from other equipment does not blow into the intake vents on the connector side of the chassis.
- Leave at least 24 in. (61 cm) both in front of and behind the RPS. For service personnel to remove and install hardware components, you must leave adequate space at both the power supply side and the switch connector side of the RPS. NEBS GR-63 recommends that you allow at least 30 in. (76.2 cm) in front of the rack or cabinet and 24 in. (61 cm) behind the rack or cabinet.

Related Documentation

- Rack Requirements on page 20
- Cabinet Requirements on page 21
- General Site Guidelines on page 19
- Rack-Mounting and Cabinet-Mounting Warnings on page 116

CHAPTER 5

Power Specifications and Requirements

Power Specifications for the EX Series Redundant Power System

Table 12 on page 25 describes the power supply electrical specifications for the EX-PWR3-930-AC power supplies of a Redundant Power System (RPS).

Table 12: AC Power Supply Electrical Specifications for an RPS Power Supply

Item	Specification
AC input voltage	100 through 240 VAC
AC input line frequency	50 through 60 Hz
AC system current rating	930 W (for each installed RPS power supply)
Power supply output (DC)	• 12V for system and logic power • -48V to -51V for Power over Ethernet (PoE)

Related Documentation

- General Safety Guidelines and Warnings on page 105
- General Electrical Safety Guidelines and Warnings on page 127
- Installing a Power Supply in the EX Series Redundant Power System on page 53

AC Power Cord Specifications for the EX Series Redundant Power System

A detachable AC power cord is supplied with the AC power supplies. The coupler is type C13 as described by International Electrotechnical Commission (IEC) standard 60320. The plug at the male end of the power cord fits into the power source outlet that is standard for your geographical location.

CAUTION: **The AC power cord provided with each power supply is intended for use with that power supply only and not for any other use.**

NOTE: In North America, AC power cords must not exceed 4.5 meters (approximately 14.75 feet) in length, to comply with National Electrical Code (NEC) Sections 400-8 (NFPA 75, 5-2.2) and 210-52 and Canadian Electrical Code (CEC) Section 4-010(3). The cords supplied with the switch are in compliance.

Table 13 on page 26 gives the AC power cord specifications for the countries and regions listed in the table.

Table 13: AC Power Cord Specifications

Country/Region	Electrical Specifications	Plug Standards	Juniper Model Number
Argentina	250 VAC, 10 A, 50 Hz	IRAM 2073 Type RA/3	CBL-EX-PWR-C13-AR
Australia	250 VAC, 10 A, 50 Hz	AS/NZZS 3112 Type SAA/3	CBL-EX-PWR-C13-AU
Brazil	250 VAC, 10 A, 50 Hz	NBR 14136 Type BR/3	CBL-EX-PWR-C13-BR
China	250 VAC, 10 A, 50 Hz	GB 1002-1996 Type PRC/3	CBL-EX-PWR-C13-CH
Europe (except Italy, Switzerland, and United Kingdom)	250 VAC, 10 A, 50 Hz	CEE (7) VII Type VIIG	CBL-EX-PWR-C13-EU
India	250 VAC, 10 A, 50 Hz	IS 1293 Type IND/3	CBL-EX-PWR-C13-IN
Israel	250 VAC, 10 A, 50 Hz	SI 32/1971 Type IL/3G	CBL-EX-PWR-C13-IL
Italy	250 VAC, 10 A, 50 Hz	CEI 23-16 Type I/3G	CBL-EX-PWR-C13-IT
Japan	125 VAC, 12 A, 50 Hz or 60 Hz	SS-00259 Type VCTF	CBL-EX-PWR-C13-JP
Korea	250 VAC, 10 A, 50 Hz or 60 Hz	CEE (7) VII Type VIIGK	CBL-EX-PWR-C13-KR
North America	125 VAC, 13 A, 60 Hz	NEMA 5-15 Type N5-15	CBL-EX-PWR-C13-US
South Africa	250 VAC, 10 A, 50 Hz	SABS 164/1:1992 Type ZA/13	CBL-EX-PWR-C13-SA
Switzerland	250 VAC, 10 A, 50 Hz	SEV 6534-2 Type 12G	CBL-EX-PWR-C13-SZ
Taiwan	125 VAC, 11 A and 15 A, 50 Hz	NEMA 5-15P Type N5-15P	CBL-EX-PWR-C13-TW
United Kingdom	250 VAC, 10 A, 50 Hz	BS 1363/A Type BS89/13	CBL-EX-PWR-C13-UK

Figure 8 on page 27 illustrates the plug on the power cord for some of the countries or regions listed in Table 13 on page 26.

Figure 8: AC Plug Types

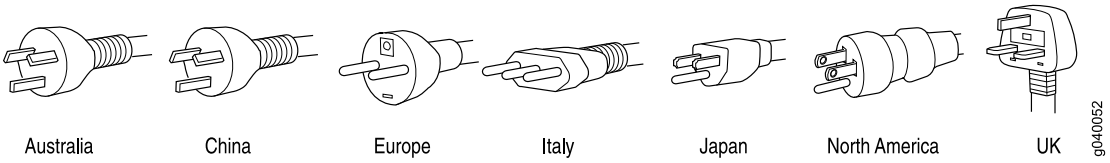

Related Documentation

- Power Supply in an EX Series Redundant Power System on page 13
- General Safety Guidelines and Warnings on page 105
- General Electrical Safety Guidelines and Warnings on page 127
- Prevention of Electrostatic Discharge Damage on page 129

PART 3

Initial Installation and Configuration

CHAPTER 6

Unpacking the RPS

Unpacking an EX Series Redundant Power System

The Redundant Power System (RPS) is shipped in a cardboard carton, secured with foam packing material. The carton also contains an accessory box. A separate cardboard carton contains one EX-PWR3-930-AC power supply.

NOTE: **The RPS is maximally protected inside the shipping carton. Do not unpack it until you are ready to begin installation.**

To unpack an RPS:

1. Move the shipping carton to a staging area as close to the installation site as possible, but where you have enough room to remove the RPS.
2. Position the carton so that the arrows are pointing up.
3. Open the top flaps on the shipping carton.
4. Remove the accessory box and verify the contents against the parts inventory on the label attached to the carton.
5. Pull out the packing material holding the RPS in place.
6. Verify the components received against the packing list included with the RPS. An inventory of parts supplied with the RPS is provided in "Parts Inventory (Packing List) for an EX Series Redundant Power System" on page 32.
7. Save the shipping carton and packing materials in case you need to move or ship the RPS later.

Related Documentation

- Mounting the EX Series Redundant Power System on page 33
- Packing an EX Series Redundant Power System or Redundant Power System Components for Shipping on page 63

Parts Inventory (Packing List) for an EX Series Redundant Power System

The Redundant Power System (RPS) shipment includes a packing list. Check the parts you receive in the RPS shipping carton against the items on the packing list. The packing list specifies the part number and description of each part in your order.

If any part on the packing list is missing, contact your customer service representative or contact Juniper customer care from within the U.S. or Canada by telephone at 1-888-314-5822. For international-dial or direct-dial options in countries without toll-free numbers, see http://www.juniper.net/support/requesting-support.html.

Table 14 on page 32 lists the parts and their quantities in the packing list for the RPS.

Table 14: Inventory of Components Provided with the RPS

Component	Quantity
RPS	1
Mounting brackets	2
Mounting screws	8
RPS cable	1
Cover panels for switch connectors (preinstalled)	6
Cover panels for power supply slots	2
RJ-45 cable and RJ-45 to DB-9 serial port adapter	1

NOTE: **The RPS ships with one power supply in a separate box. Additional EX-PWR3-930-AC power supplies for RPS must be ordered separately.**

Related Documentation

- Unpacking an EX Series Redundant Power System on page 31
- EX Series Redundant Power System Hardware Overview on page 4

CHAPTER 7

Installing the RPS

Mounting the EX Series Redundant Power System

You can mount the Redundant Power System (RPS) on a 19-in. equipment rack or cabinet by using mounting brackets. The RPS is shipped with mounting brackets and mounting screws to be used to secure the mounting brackets to the RPS chassis.

The RPS is shipped with one pair of mounting brackets. The holes in the mounting brackets are spaced at 1 U (1.75 in. or 4.445 cm), so that the RPS can be mounted in any rack that provides holes spaced at that distance.

The outer edges of the mounting brackets extend the width of the RPS to 19 in. (48.2 cm) and the front of the chassis extends approximately 0.5 in. (1.27 cm) beyond the mounting brackets when the RPS is front-mount on a rack.

You can mount an RPS:

- On two posts in a 19-in. rack or cabinet by using the mounting brackets provided with the RPS.
- On four posts in a 19-in. rack or cabinet by using the separately orderable four-post rack-mount kit.
- In a position recessed 2 in. from the front of a 19-in. rack or cabinet by using the 2-in. recess front brackets in the separately orderable four-post rack-mount kit. You can mount the RPS in this recessed position on two-post or four-post racks and cabinets.

Related Documentation

- Mounting an EX Series Redundant Power System on Two Posts in a Rack or Cabinet on page 38

- Mounting an EX Series Redundant Power System on Four Posts in a Rack or Cabinet on page 34
- Mounting an EX Series Redundant Power System in a Recessed Position in a Rack or Cabinet on page 34
- Video: Installing the EX Series Redundant Power System

Mounting an EX Series Redundant Power System in a Recessed Position in a Rack or Cabinet

You can mount a Redundant Power System (RPS) in a rack or cabinet such that the RPS is recessed inside the rack from the rack front by 2 inches. You can use the 2-in.-recess front brackets provided in the separately orderable four-post rack-mount kit to mount the RPS in a recessed position.

You might want to mount the RPS in a recessed position in a cabinet if the cabinet doors do not close completely unless the RPS is recessed.

To mount the RPS in a recessed position on two posts, follow the instructions in "Mounting an EX Series Redundant Power System on Two Posts in a Rack or Cabinet" on page 38. To mount the RPS in a recessed position on four posts, follow the instructions in "Mounting an EX Series Redundant Power System on Four Posts in a Rack or Cabinet" on page 34.

Related Documentation

- Video: Installing the EX Series Redundant Power System
- Rack-Mounting and Cabinet-Mounting Warnings on page 116

Mounting an EX Series Redundant Power System on Four Posts in a Rack or Cabinet

You can mount a Redundant Power System (RPS) on four posts of a 19-in. rack or cabinet by using the separately orderable four-post rack-mount kit. (The remainder of this topic uses "rack" to mean "rack or cabinet.")

NOTE: **You can position either the switch connector side or the power supply side of the RPS at the front of the rack.**

Before mounting the RPS on four posts in a rack:

- Verify that the site meets the requirements described in "Site Preparation Checklist for an EX Series Redundant Power System" on page 17.
- Place the rack in its permanent location, allowing adequate clearance for airflow and maintenance, and secure it to the building structure (see "Clearance Requirements for Airflow and Hardware Maintenance for an EX Series Redundant Power System" on page 22).

- Read "General Safety Guidelines and Warnings" on page 105, with particular attention to "Chassis Lifting Guidelines" on page 114.
- Remove the RPS from the shipping carton (see "Unpacking an EX Series Redundant Power System" on page 31).

Ensure that you have the following parts and tools available:

- Phillips (+) screwdriver, number 2
- 6 flat-head 4-40 mounting screws (provided with the four-post rack-mount kit)
- 12 flat-head 4x6-mm Phillips mounting screws (provided with the four-post rack-mount kit)
- One pair each of flush or 2-inch-recess front brackets
- One pair of side-rail brackets
- One pair of rear brackets
- Screws to secure the chassis and the rear brackets to the rack (not provided)

NOTE: We recommend that you first mount the RPS and then install the power supplies in it.

CAUTION: If you are mounting multiple RPSs on a rack, mount the heaviest RPS at the bottom of the rack and mount the other RPSs from the bottom of the rack to the top in decreasing order of the weight of the units.

To mount the RPS on four posts in a rack:

1. Attach the front brackets (either the flush or the 2-inch-recess brackets) to the side-rail brackets using the six 4-40 flat-head Phillips mounting screws. See Figure 9 on page 36.

Figure 9: Attaching the Front Bracket to the Side-Rail Bracket

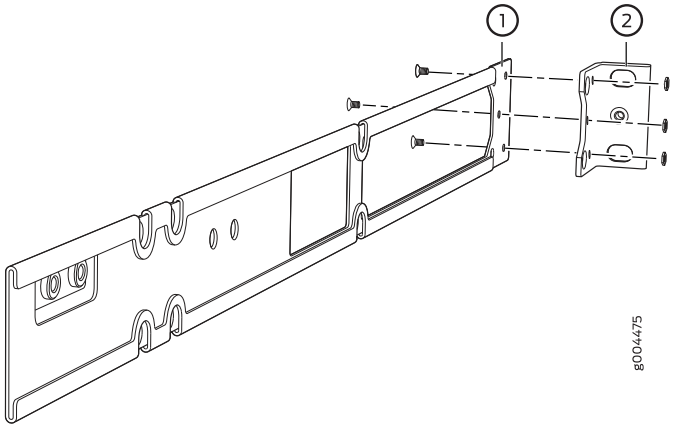

2. Place the RPS on a flat, stable surface.

3. Align the side-rail brackets along the side panels of the chassis.

4. Insert the 4x6-mm Phillips flat-head mounting screws into the aligned holes and tighten the screws. See Figure 10 on page 36.

Figure 10: Attaching the Side-Rail Bracket to the Chassis

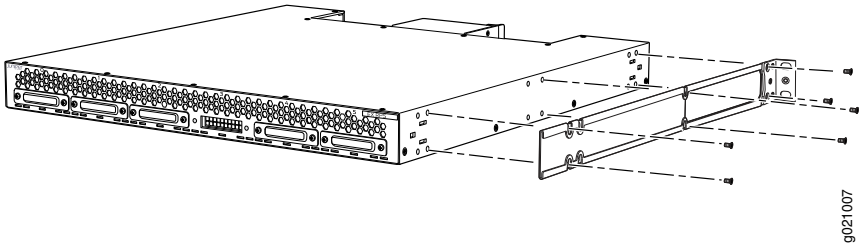

5. Have one person grasp both sides of the RPS, lift the RPS and position it in the rack, aligning the side-rail bracket holes with the threaded holes in the front post of the rack. Align the bottom hole in both the mounting brackets with a hole in each rack rail, making sure the chassis is level. See Figure 11 on page 37.

Figure 11: Mounting the RPS to the Front Posts of a Rack

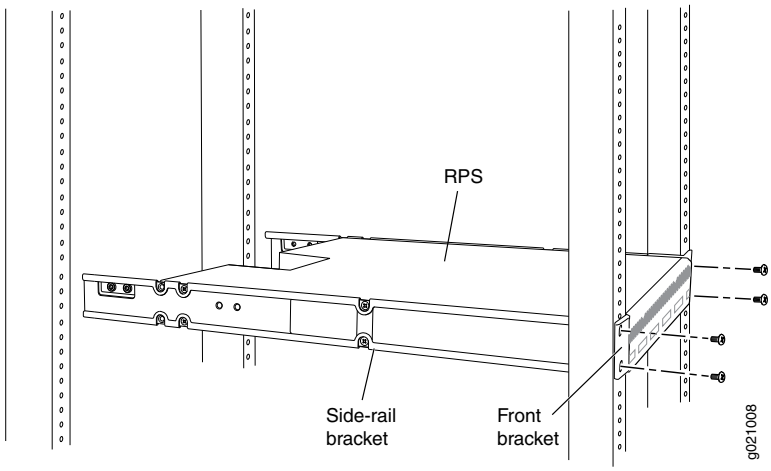

6. Have a second person secure the front of the RPS to the rack by using the appropriate screws for your rack.

7. Slide the rear brackets into the side-rail brackets. See Figure 12 on page 37.

Figure 12: Sliding the Rear Brackets to the Rear of a Four-Post Rack

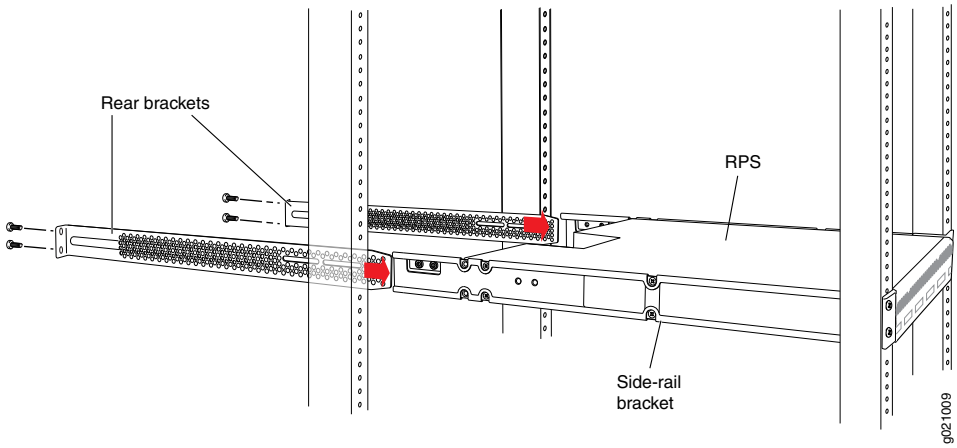

8. Attach the rear brackets to the rear post by using the appropriate screws for your rack. Tighten the screws.

9. Ensure that the chassis is level by verifying that all the screws on the front of the rack are aligned with the screws at the back of the rack.

Related Documentation

- Connecting Power to an EX Series Redundant Power System Power Supply on page 41
- Mounting an EX Series Redundant Power System on Two Posts in a Rack or Cabinet on page 38

- Mounting an EX Series Redundant Power System in a Recessed Position in a Rack or Cabinet on page 34
- Video: Installing the EX Series Redundant Power System
- Rack-Mounting and Cabinet-Mounting Warnings on page 116

Mounting an EX Series Redundant Power System on Two Posts in a Rack or Cabinet

You can mount a Redundant Power System (RPS) on two posts of a 19-in. rack or cabinet by using the provided mounting brackets. (The remainder of this topic uses “rack” to mean “rack or cabinet.”)

NOTE: **You can position either the switch connector side or the power supply side of the RPS at the front of the rack.**

Before mounting an RPS on two posts in a rack:

- Verify that the site meets the requirements described in “Site Preparation Checklist for an EX Series Redundant Power System” on page 17.
- Place the rack in its permanent location, allowing adequate clearance for airflow and maintenance, and secure it to the building structure. See “Clearance Requirements for Airflow and Hardware Maintenance for an EX Series Redundant Power System” on page 22.
- Read “General Safety Guidelines and Warnings” on page 105, with particular attention to “Chassis Lifting Guidelines” on page 114.
- Remove the RPS from the shipping carton (see “Unpacking an EX Series Redundant Power System” on page 31).

Ensure that you have the following parts and tools available:

- Phillips (+) screwdriver, number 2
- 2 mounting brackets and 8 mounting screws (provided in the accessory box shipped with the RPS)
- Screws to secure the chassis to the rack (not provided)
- 2-inch-recess front brackets if you will mount the switch in a recessed position (brackets are from the separately orderable four-post rack-mount kit)

NOTE: **We recommend that you first mount the RPS and then install the power supplies in it.**

CAUTION: Two people are needed for installation. One person must be available to lift the RPS while another secures the RPS to the rack.

CAUTION: If you are mounting multiple RPSs on a rack, mount the heaviest RPS at the bottom of the rack and mount the other RPSs from the bottom of the rack to the top in decreasing order of the weight of the units.

To mount the RPS on two posts in a rack:

1. Place the RPS on a flat, stable surface.

2. Align the mounting brackets along the front, rear, or middle of the side panels of the chassis depending on how you want to mount the RPS. For example, if you want to front-mount the RPS, align the brackets along the front of the side panel. See Figure 13 on page 39.

Figure 13: Attaching the Mounting Bracket to the Side Panel of the RPS

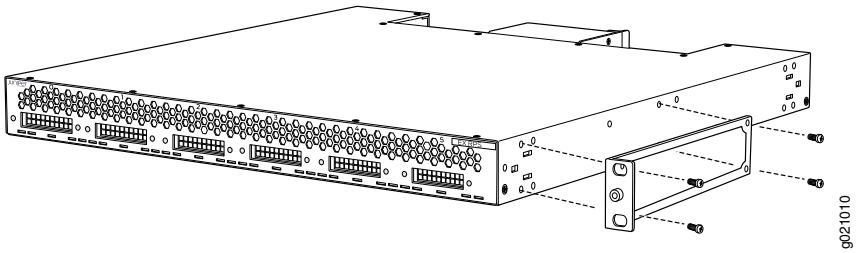

3. Align the bottom holes in the mounting brackets with holes on the side panels of the chassis.

4. Insert mounting screws and tighten them.

5. Ensure that the other holes in the mounting brackets are aligned with the holes in the side panels. Insert a screw in each hole and tighten the screws.

6. Have one person grasp both sides of the RPS, lift the RPS, and position it in the rack, aligning the mounting bracket holes with the threaded holes in the rack or cabinet rail. Align the bottom hole in both the mounting brackets with a hole in each rack rail, making sure the chassis is level. See Figure 14 on page 40.

Figure 14: Mounting the RPS on Two Posts in a Rack

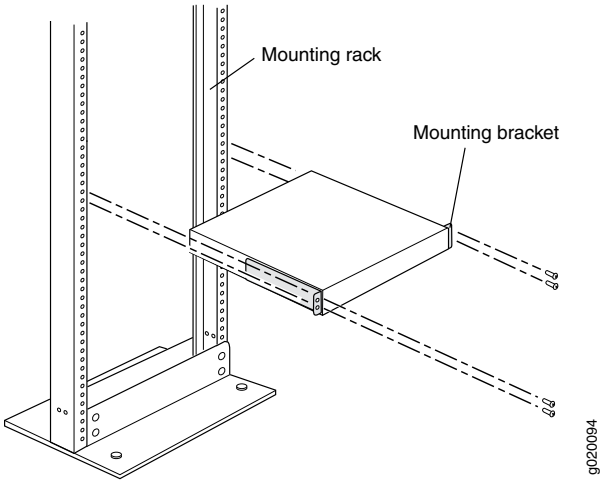

7. Have a second person secure the RPS to the rack by using the appropriate screws. Tighten the screws.

8. Ensure that the chassis is level by verifying that all screws on one side of the rack are aligned with the screws on the other side.

Related Documentation

- Connecting Power to an EX Series Redundant Power System Power Supply on page 41
- Mounting an EX Series Redundant Power System on Four Posts in a Rack or Cabinet on page 34
- Mounting an EX Series Redundant Power System in a Recessed Position in a Rack or Cabinet on page 34
- Video: Installing the EX Series Redundant Power System
- Rack-Mounting and Cabinet-Mounting Warnings on page 116

CHAPTER 8

Connecting the RPS

Connecting Power to an EX Series Redundant Power System Power Supply

Power is supplied to an RPS by the installed EX-PWR3-930-AC power supplies—the RPS itself does not have a power connector. After you install a power supply in the Redundant Power System (RPS), connect AC power to the power supply.

NOTE: **Each power supply in the RPS must be connected to its own dedicated power source outlet.**

Before you begin connecting AC power to the RPS:

- Ensure that you have connected earth ground to the RPS chassis.

CAUTION: Before you connect power to the power supply, a licensed electrician must attach a cable lug to the grounding and power cables that you supply. A cable with an incorrectly attached lug can damage the RPS (for example, by causing a short circuit).

CAUTION: To meet safety and electromagnetic interference (EMI) requirements and to ensure proper operation, you must connect the RPS to an earth ground before you connect it to power. For installations that require a separate grounding conductor to the RPS chassis, use the protective earthing terminal on the chassis to connect to the earth ground. The RPS gets additional grounding when you plug a power supply in the RPS into a grounded AC power outlet by using the AC power cord appropriate for your geographical location (see "Power Specifications for the EX Series Redundant Power System" on page 25).

Ensure that you have the following parts and tools available to connect AC power to the RPS:

- Power cord appropriate for your geographical location

To connect AC power to the power supply installed in the RPS:

1. Ensure that the power supply is properly inserted in the chassis and the screws on its faceplate are tightened.

2. Squeeze the two sides of the power cord retainer clip, and insert the L-shaped ends of the wire clip into the holes in the bracket on each side of the AC appliance inlet on the power supply faceplate (see Figure 15 on page 43).

3. Locate the power cord shipped with the power supply.

   WARNING: Ensure that the power cord does not block access to other components on the rack or cabinet, or drape where people can trip on it.

4. Insert the coupler end of the power cord into the AC appliance inlet on the power supply faceplate (see Figure 15 on page 43).

Figure 15: Each Power Supply Must Be Plugged In

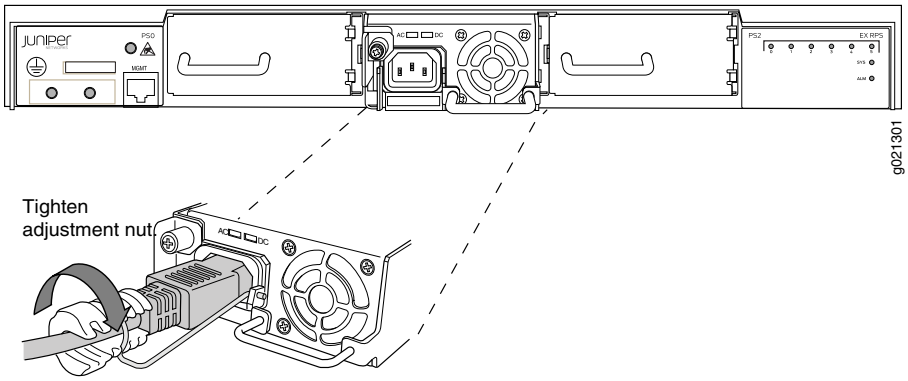

5. Push the cord into the connector in the adjustment nut of the power cord retainer. Turn the nut until it is tight against the base of the coupler and the connector in the nut is turned 90º from the top of the RPS (see Figure 15 on page 43).

6. If the AC power source outlet has a power switch, set it to the OFF (0) position.

7. Plug the power cord into an AC power source outlet.

8. If the AC power source outlet has a power switch, set it to the ON (|) position.

9. Verify that the **AC OK** LED on the power supply is lit and is on steadily.

10. Repeat these steps for each power supply installed in the RPS.

As soon as power is connected to the middle power supply, the RPS is powered on. Install up to two additional power supplies with the RPS powered on—the power supplies are hot-insertable.

Related Documentation

- Power Specifications for the EX Series Redundant Power System on page 25
- EX Series Redundant Power System Hardware Overview on page 4

Connecting the EX Series Redundant Power System to an EX2200 or EX3300 Switch

The Redundant Power System (RPS) can be connected to up to six EX2200 switches (supported models) or any EX3300 switches. One RPS can be used for any combination of supported switches, including one Virtual Chassis.

Before you connect an RPS to a switch:

- Ensure that you have taken the necessary precautions to prevent electrostatic discharge (ESD) damage (see "Prevention of Electrostatic Discharge Damage" on page 129).
- Ensure that the middle power supply is fully inserted in the RPS and the screws on its faceplate are tightened.
- Ensure that you have connected the RPS and the switch chassis to earth ground.

CAUTION: **To meet safety and electromagnetic interference (EMI) requirements and to ensure proper operation, you must connect the switch chassis and the RPS to an earth ground before you connect them. For installations that require a separate grounding conductor to the chassis, use the protective earthing terminal on the switch chassis to connect to the earth ground.**

- Ensure that the RPS is powered on.

NOTE: **If you connect an RPS to a switch that is already booted, the RPS might take up to two minutes to come up after you power it on.**

Ensure you have the following parts and tools available to connect the RPS to the switch:

- One RPS cable for each switch (one is supplied—order additional cables separately)

Figure 16: RPS Cable

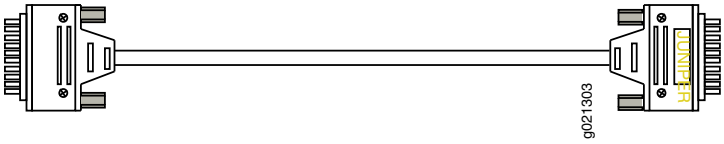

- Phillips (+) screwdriver, number 2 (not supplied)

Each switch has a default priority of 1 assigned to it when you connect it to the RPS. Those priority values determine which switches receive power from the RPS first. When all switches have the same priority (as they do by default), then priority is next determined by connector position, with the rightmost connector having the highest priority and the leftmost connector having the lowest priority. Position your switches accordingly. (You can also reconfigure switch priority from the switches themselves—see "Determining and Setting Priority for Switches Connected to an EX Series RPS" on page 47.)

To connect the RPS to the switch:

1. Each EX2200 switch and EX3300 switch has a built-in connector for the RPS on the rear panel. If the RPS port of the switch is covered with a cover panel, remove the cover panel and save it for later use.

2. Connect the cable to the switch. Gently insert one end of the RPS cable into the RPS port on the rear panel of the switch—see Figure 17 on page 45.

Figure 17: Connect the RPS Cable to the Switch

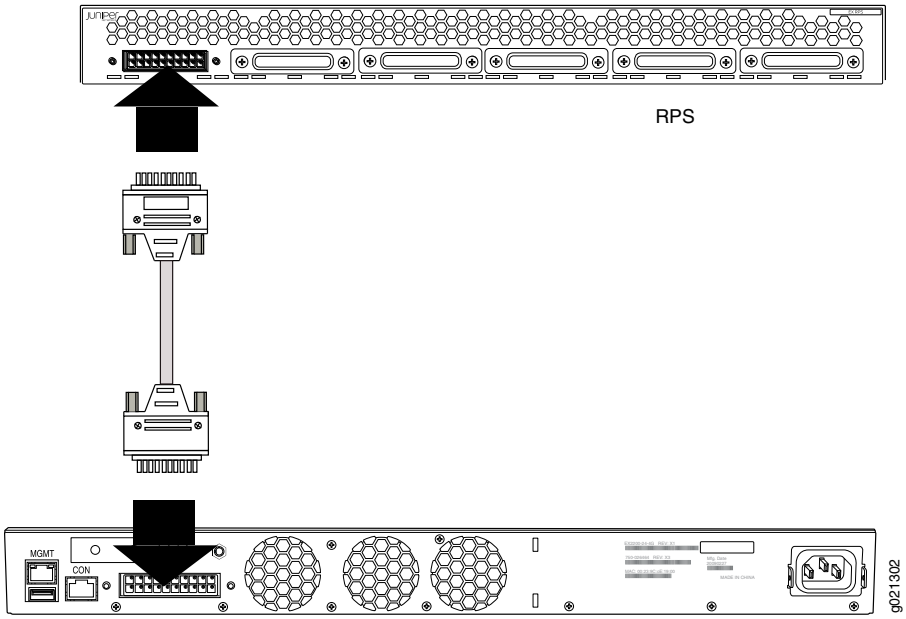

3. The RPS ships with cover panels on each of the six ports—select any one of the ports and remove the cover panel, saving it for later use.

4. Connect the cable to the uncovered RPS port—see Figure 17 on page 45. As soon as the connection between the RPS and the switch is complete, the software starts configuring the connection.

WARNING: **Ensure that the cables do not block access to switch components or drape where people can trip on them.**

5. After a minute, verify that the status LED corresponding to the switch connector is lit.

6. Repeat these steps for each supported switch (six maximum) you connect to the RPS.

NOTE: **Before the RPS can back up a connected switch, the switch's RPS status must be ARMED. There are two ways to determine whether a switch's RPS status is ARMED—either check the corresponding port LED on the RPS (lit and on steady) or issue this operational mode command from the switch CLI: show chassis redundant-power-system.**

Related Documentation

- Installing a Power Supply in the EX Series Redundant Power System on page 53
- Connecting Power to an EX Series Redundant Power System Power Supply on page 41
- Determining and Setting Priority for Switches Connected to an EX Series RPS on page 47
- LEDs on an EX Series Redundant Power System on page 11

CHAPTER 9

Performing Initial Configuration

Determining and Setting Priority for Switches Connected to an EX Series RPS

A Redundant Power System (RPS) provides backup power according to the RPS priority configured on the standalone EX Series switches or Virtual Chassis member switches connected to it. If all switches connected to the RPS are set to the default priority of 1, the priority is determined on the basis of the RPS port to which they are connected, with higher port numbers having the higher priorities.

The number of switches for which an RPS can provide backup power depends on whether the switches provide power over Ethernet (PoE).

- PoE: A fully loaded RPS provides backup power to a maximum of three switches that are enabled for PoE—the result in this case is one switch powered per power supply. If more than three PoE-enabled switches are connected to the RPS and the RPS is already providing backup power to three switches when another switch's power supply fails, the RPS detects this and re-allots backup power as required. It would then stop providing backup power to a low-priority switch to provide backup power to a higher-priority switch.
- Non-PoE: If you changed the RPS power setting to non-PoE with the command **request redundant-power-system multi-backup**, your RPS is configured to provide back up power to as many as six non-PoE switches on a fully loaded RPS. Each power supply can support two switches when the switches do not need enough power for PoE.

NOTE: Before an RPS can back up a switch connected to it, the switch's RPS status must be ARMED. There are two ways to determine whether a switch's RPS status is ARMED—either check that the corresponding port LED on the RPS is lit and on steady or issue this command from the switch's CLI: show chassis redundant-power-system.

This topic describes how to determine and set the power priority for a switch connected to an RPS.

- Using RPS Default Configuration on page 48
- Setting the EX Series RPS Priority for a Switch (CLI) on page 48

Using RPS Default Configuration

No configuration is required on an RPS if you:

- Plan to back up as many as six non-PoE switches
- Back up three PoE switches with three RPS power supplies
- Back up four or more PoE switches with RPS three power supplies and let the RPS port to which the switch is connected determine the priority

By default, an RPS assigns priority to switches on the basis of their switch connector port location, with the with higher port numbers having the higher priorities. By default, all switches are themselves configured with the same RPS priority (priority 1, the lowest), which is why priority is derived from the RPS connector port numbers.

Setting the EX Series RPS Priority for a Switch (CLI)

Each switch connected to RPS has an RPS priority value—that priority value determines which PoE switches receive power first from the RPS. By default, all switches are configured for priority 1 so priority is then determined by switch connector port location, left (lowest) to right (highest).

You can change the priority of a switch to 0 (off), or 1 (lowest) through 6 (highest) from the switch itself—this configuration takes precedence over switch connector port location.

To set or change the priority for a switch that does not support Virtual Chassis:

```
[edit]
user@switch# set redundant-power-system priority
```

To set or change the priority for a switch that supports Virtual Chassis:

```
[edit]
user@switch# set redundant-power-system member vc-member-id priority priority-number
```

Where member is 0 for a switch that has never been configured in a Virtual Chassis.

Related Documentation

- Understanding How Power Priority Is Determined and Set for Switches Connected to the EX Series Redundant Power System on page 6

- Connecting the EX Series Redundant Power System to an EX2200 or EX3300 Switch on page 43
- EX Series Redundant Power System Hardware Overview on page 4

PART 4

Installing, Maintaining, and Replacing Components

CHAPTER 10

Replacing Power Supply

Installing a Power Supply in the EX Series Redundant Power System

The Redundant Power System (RPS) accommodates up to three EX-PWR3-930-AC hot-insertable and hot-removable field-replaceable unit (FRU) power supplies. As soon as power is connected to the middle power supply, the RPS is powered on. You can install, remove, or replace additional power supplies in the RPS without powering off the RPS or disrupting RPS functions. For ease of installation, we recommend that you install the RPS first, then install the power supplies into the RPS, starting with the middle power supply.

Before you install a power supply in the RPS chassis:

- Ensure you understand how to prevent electrostatic discharge (ESD) damage. See "Prevention of Electrostatic Discharge Damage" on page 129.

Ensure you have the following parts and tools available to install the power supply in the RPS:

- Phillips (+) screwdriver, number 1

NOTE: Each RPS power supply must be connected to its own dedicated power source outlet.

WARNING: An RPS has one power cord for each power supply. Disconnect all power supply cords before you service the RPS, to avoid electric shock.

Attention! Cet appareil comprote plus d'un cordon d'alimentation. Afin de prévenir les chocs électriques, débrancher tout cordon d'alimentation avant de faire le dépannage.

Install from one through three power supplies. You must first install a power supply in the middle slot to power on the RPS. You can install remaining power supplies in any order.

1. Start with the middle power supply slot—this slot has no cover. The other two slots are shipped with covers. If you are installing a power supply in either of those slots, loosen the locking lever screw on the left of the cover panel using the screwdriver, remove the cover panel, and save it for later use.

2. Taking care not to touch power supply components such as pins, leads, or solder connections, remove the power supply from its bag.

3. Loosen the locking lever screw on the left front of the power supply by using the screwdriver—see Figure 18 on page 54.

4. Push down on the locking lever until it is in its lowest position—see Figure 18 on page 54.

5. Using both hands, slide the power supply into the uncovered slot on the power supply side of the RPS until it is fully seated.

Figure 18: Installing a Power Supply in the RPS

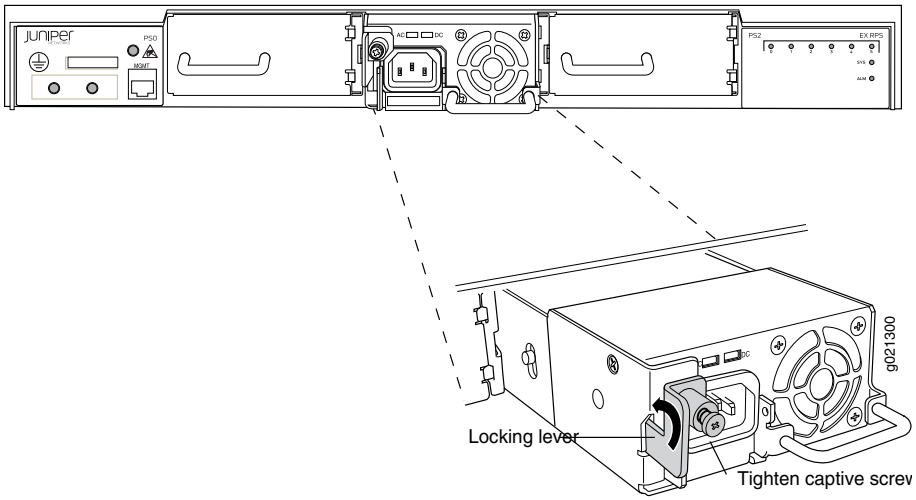

6. Push the locking lever up to its highest position—see Figure 18 on page 54.

7. Tighten the locking lever screw by using the screwdriver—see Figure 18 on page 54.

8. Repeat these steps for up to three power supplies.

Related Documentation

- Connecting Power to an EX Series Redundant Power System Power Supply on page 41
- Removing a Power Supply from the EX Series RPS on page 55

Removing a Power Supply from the EX Series RPS

As soon as power is connected to the middle power supply, the RPS is powered on. You can remove and replace the power supplies in the other two RPS slots without powering off the connected switch or disrupting switch functions. The power supplies in the EX Series Redundant Power System (RPS) are hot-insertable and hot-removable field-replaceable units (FRUs).

CAUTION: **Before you remove a power supply installed in the RPS, ensure that no switch connected to the RPS needs that power.**

Ensure you have the following parts and tools available to remove the power supply from the RPS:

- Phillips (+) screwdriver, number 1
- Replacement power supply or a cover panel for the power supply port
- An antistatic bag or an antistatic mat

To remove a power supply from the RPS (see Figure 19 on page 56):

1. Place the antistatic bag or the antistatic mat on a flat, stable surface.
2. Disconnect power from the AC power source outlet by performing one of the two following tasks:
   - If the AC power source outlet has a power switch, set it to the **OFF** position.
   - If the AC power source outlet has no power switch, gently pull the male end of the power cord connected to the power source outlet out of the outlet.
3. Remove the power cord from the AC appliance inlet on the power supply faceplate.
4. Loosen the locking lever screw on the left front of the power supply by using the screwdriver.
5. Push down on the locking lever until it is in its lowest position.
6. Grasp the power supply handle and pull firmly to slide it halfway out of the chassis.
7. Place one hand under the power supply to support it and slide it completely out of the chassis.

8. Place the power supply in the antistatic bag or on the antistatic mat placed on a flat, stable surface.

9. If you are not replacing the power supply, install the cover panel over the port.

Figure 19: Removing a Power Supply

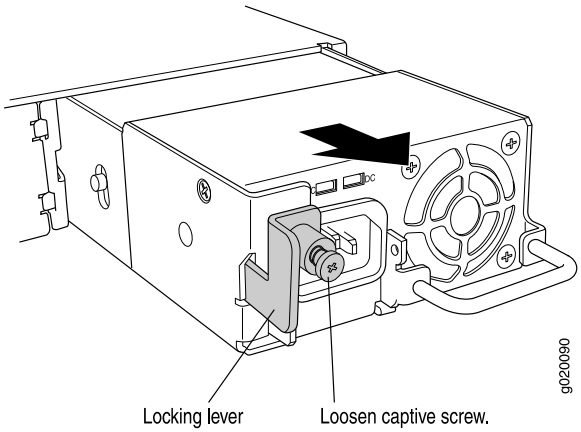

Related Documentation

- Installing a Power Supply in the EX Series Redundant Power System on page 53

CHAPTER 11

Routine Maintenance

Upgrading Firmware on an EX Series Redundant Power System

Unlike the EX Series switches it supports, the RPS does not run the Junos OS. RPS is run by low-level instructions installed on a flash drive on the RPS. Periodically, Juniper Networks upgrades the RPS firmware and makes those upgrades available on the support site. Upgrade the RPS firmware by using an attached switch's CLI to copy the new image from your TFTP site to the RPS management port, then issue the upgrade command.

This topic includes:

Determine the Current EX Series RPS Firmware Version

To see what version of firmware is currently running on an RPS, issue this Junos OS CLI command on any connected switch: **show redundant-power-system version**. If you issue the **show redundant-power-system version** command from a standalone switch, the output looks something like this:

```
RPS-CG0209121807
     Model: EX-PWR_RPS200
     RPS Firmware Version [1.0]
     RPS U-Boot   Version [1.1.6]
```

If you issue the **show redundant-power-system version** command from a Virtual Chassis, the output looks something like this:

```
RPS-CG0209121814
     Model: EX-PWR_RPS200
     RPS Firmware Version [1.0]
     RPS U-Boot   Version [1.1.6]
   RPS-CG0209121815
     Model: EX-PWR_RPS200
```

```
RPS Firmware Version [1.0]
RPS U-Boot   Version [1.1.6]
```

Connect the Supplied Cable from the EX Series RPS to the Network

You will upgrade the RPS from an attached switch. The RPS is always connected to one or more switches with RPS cables during normal operation. During the firmware upgrade, you must also connect the supplied RJ-45 cable to the management port on the RPS and connect the other end of the RJ-45 cable to the network where the firmware upgrade file is available via TFTP. The RPS will then have two connections as shown in Figure 20 on page 58.

Figure 20: Connecting the RJ-45 Cable for a Firmware Upgrade

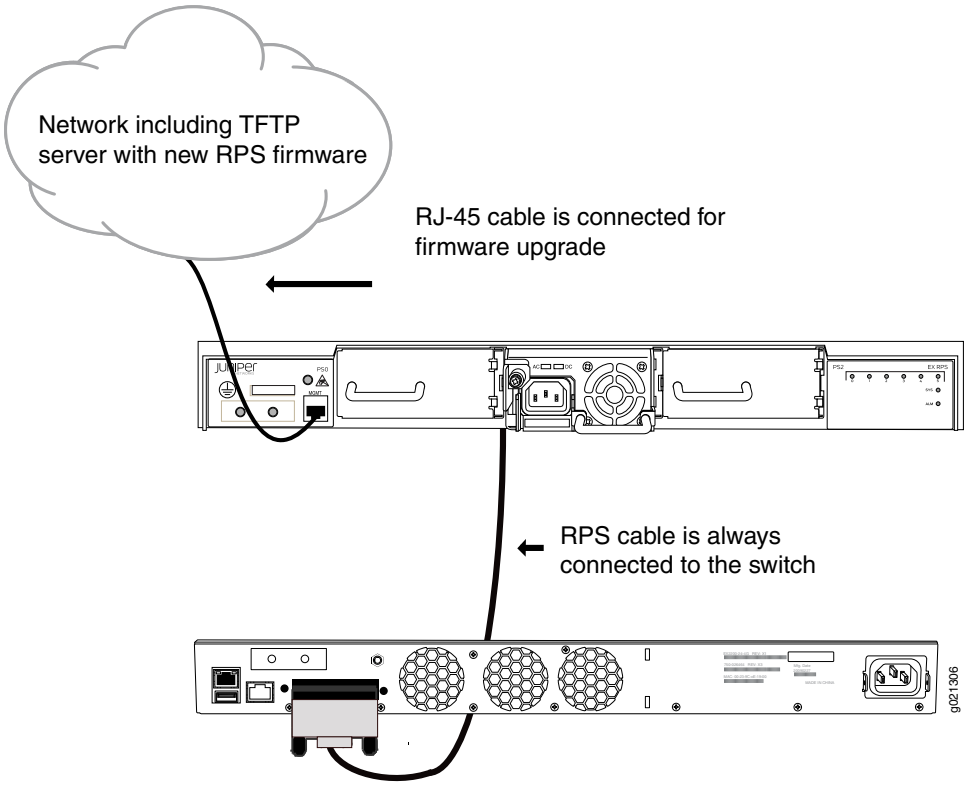

Use an Attached Switch's CLI to Upgrade EX Series RPS Firmware

Upgrading RPS firmware is done from an attached switch but it is not done from the CLI configuration mode. All of the steps in this process use the CLI operational mode on the switch.

NOTE: Be sure the RJ-45 cable is connected to the network that includes the TFTP location, as shown in Figure 20 on page 58.

To upgrade RPS firmware:

1. Copy the new firmware image from the Juniper Networks support site to a TFTP server on the attached network. Note the TFTP server address.

2. Determine these three RPS network addresses with the command **show redundant-power-system network**.:

   - RPS IP address
   - RPS netmask address
   - RPS gateway address

3. From the CLI on a switch attached to the RPS, set the RPS parameters for the TFTP server, the RPS IP address, the RPS netmask address, and the RPS gateway address:

   user@switch>**set redundant-power-system network member 1 ip-address *ip-address* netmask *netmask-address* gateway *gateway-address***

   These RPS parameters are stored as environment variables.

4. Check to make sure that the IP address, netmask, and gateway settings you just configured are correct:

   user@switch>**show redundant-power-system network**

5. Update the RPS firmware, using the command appropriate for your switch.

   To update the RPS firmware from an EX3300 switch CLI:

   user@switch>**request redundant-power-system firmware upgrade member 1 server *server-ip-address* image *filename-with-path***

   To update the RPS firmware from an EX2200 switch CLI:

   user@switch>**request redundant-power-system firmware upgrade server *server-ip-address* image *filename-with-path***

   The filename should include the path to any subdirectories, for example, **bnaa/rps/rps1.1**.

   The firmware now updates, then shuts down the RPS. If the firmware upgrade was successful, the RPS resets and boots up with the upgraded image.

6. From the CLI on the switch, check the status of the upgrade:

   user@switch>**show redundant-power-system upgrade status**

   In addition to listing the old and new firmware versions, this command shows upgrade details such as pass, fail, and file not found.

Example: Upgrading EX Series RPS Firmware Using an EX2200 Switch

This example upgrades RPS from version 1 to version 1.1.

```
user@switch> set redundant-power-system network  ip-address 10.93.2.38 netmask
 255.255.254.0 gateway 10.93.3.254
Sending network information  to RPS

user@switch> show redundant-power-system network
Requesting information from redundant-power-system.
    IP Address:   10.93.2.38
    Netmask: 255.255.254.0
    Gateway:  10.93.3.254
Multi-Backup: disabled

user@switch> request redundant-power-system firmware upgrade member 1  server
 172.17.28.28 image  bnaa/rps/rps1.1
Sending upgrade command

[SYSTEM REBOOTS HERE]

user@switch> show redundant-power-system upgrade
Requesting information from redundant-power-system..
    Firmware Upgrade Status:   Pass
    Previous Firmware Version: 1.0
    Current Firmware Version:  1.1
```

Example: Upgrading EX Series RPS Firmware From an EX3300 Switch

```
user@switch> set redundant-power-system network member 1   ip-address 10.93.2.38
 netmask 255.255.254.0 gateway 10.93.3.254
Sending network information  to RPS

{master:1}
user@switch> show redundant-power-system network
Requesting information from redundant-power-system.
    IP Address:   10.93.2.38
    Netmask: 255.255.254.0
    Gateway:  10.93.3.254
Multi-Backup: disabled

{master:1}
user@switch> request redundant-power-system firmware upgrade member 1 server
 172.17.28.28 image  bnaa/rps/rps1.1
Sending upgrade command

[SYSTEM REBOOTS HERE]

{master:1}
user@switch> show redundant-power-system upgrade
Requesting information from redundant-power-system..
    Firmware Upgrade Status:   Pass
    Previous Firmware Version: 1.0
    Current Firmware Version:  1.1
```

Related Documentation

- redundant-power-system on page 85
- show redundant-power-system network on page 94
- show redundant-power-system version on page 100
- show redundant-power-system upgrade on page 99

CHAPTER 12

Contacting Customer Support and Returning the Chassis or Components

Returning an EX Series RPS or RPS Component for Repair or Replacement

If you need to return a Redundant Power System (RPS) or an RPS power supply to Juniper Networks for repair or replacement, follow this procedure:

1. Determine the serial number of the component. For instructions, see "Locating the Serial Number on an EX Series Redundant Power System or Redundant Power System Components" on page 62.

2. Obtain an RMA number from JTAC as described in "Contacting Customer Support to Obtain Return Material Authorization" on page 63.

   NOTE: **Do not return any device or component to Juniper Networks unless you have first obtained an RMA number. Juniper Networks reserves the right to refuse shipments that do not have an RMA. Refused shipments are returned to the customer through collect freight.**

3. Pack the RPS or the RPS power supply for shipping as described in "Packing an EX Series Redundant Power System or Redundant Power System Components for Shipping" on page 63 .

For more information about return and repair policies, see the customer support page at http://www.juniper.net/support/guidelines.html.

Related Documentation

- EX Series Redundant Power System Hardware Overview on page 4

Locating the Serial Number on an EX Series Redundant Power System or Redundant Power System Components

If you are returning a Redundant Power System (RPS) or a power supply to Juniper Networks for repair or replacement, you must determine and provide the serial number to the Juniper Networks Technical Assistance Center (JTAC) when you contact them to obtain Return Materials Authorization (RMA).

If the RPS is operational and you can access the CLI, you can list the RPS serial number with the CLI command **show chassis redundant-power-system**. If you do not have access to the CLI or if the serial number of the RPS or RPS power supply does not appear in the command output, you can locate the RPS serial number on the left side of the chassis. To find the serial number of one of the installed power supplies, you need to remove the power supply from the RPS. See "Removing a Power Supply from the EX Series RPS" on page 55.

This topic describes:

- Listing the EX Series Redundant Power System Details with a Switch CLI on page 62
- Locating the Chassis Serial Number ID Label on an EX Series RPS on page 62
- Locating the Serial Number ID Labels on a Power Supply in an EX Series Redundant Power System on page 62

Listing the EX Series Redundant Power System Details with a Switch CLI

To list the RPS details and serial number, enter the following CLI command using the switch connected to the RPS:

```
user@switch> show chassis redundant-power-system

Member Status      RPS            Port
  0    Armed       CG0209121807   5
  2    Armed       CG0209121807   3
  1    Armed       CG0209121807   4
```

Locating the Chassis Serial Number ID Label on an EX Series RPS

The RPS has a serial number ID label on the left side of the chassis.

Locating the Serial Number ID Labels on a Power Supply in an EX Series Redundant Power System

The power supply in an RPS has a serial number ID label on the top of the power supply. See "Removing a Power Supply from the EX Series RPS" on page 55.

Related Documentation

- Contacting Customer Support to Obtain Return Material Authorization on page 63
- Returning an EX Series RPS or RPS Component for Repair or Replacement on page 61

Contacting Customer Support to Obtain Return Material Authorization

If you are returning a device or hardware component to Juniper Networks for repair or replacement, obtain a Return Material Authorization (RMA) number from Juniper Networks Technical Assistance Center (JTAC).

After locating the serial number of the device or hardware component you want to return, open a Case with Juniper Networks Technical Assistance Center (JTAC) on the Web or by telephone.

Before you request an RMA number from JTAC, be prepared to provide the following information:

- Your existing case number, if you have one
- Serial number of the component
- Your name, organization name, telephone number, fax number, and shipping address
- Details of the failure or problem
- Type of activity being performed on the device when the problem occurred
- Configuration data displayed by one or more **show** commands

You can contact JTAC 24 hours a day, seven days a week on the Web or by telephone:

- Case Manager at CSC: http://www.juniper.net/cm/
- Telephone: +1-888-314-JTAC1-888-314-5822, toll free in U.S., Canada, and Mexico

NOTE: **For international or direct-dial options in countries without toll free numbers, see** http://www.juniper.net/support/requesting-support.html.

If you are contacting JTAC by telephone, enter your 11-digit case number followed by the pound (#) key for an existing case, or press the star (*) key to be routed to the next available support engineer.

The support representative validates your request and issues an RMA number for return of the component.

Related Documentation

- Prevention of Electrostatic Discharge Damage on page 129

Packing an EX Series Redundant Power System or Redundant Power System Components for Shipping

If you are returning a Redundant Power System (RPS) or an RPS power supply to Juniper Networks for repair or replacement, pack the item as described in this topic.

Before you begin packing the RPS or RPS power supply, ensure you have:

- Followed all the steps listed in "Contacting Customer Support to Obtain Return Material Authorization" on page 63.
- Retrieved the original shipping carton and packing materials. Contact your JTAC representative if you do not have these materials, to learn about approved packing materials. See "Contacting Customer Support to Obtain Return Material Authorization" on page 63.
- Reviewed recommendations on how to prevent ESD damage. See "Prevention of Electrostatic Discharge Damage" on page 129.
- Ensured that you have the following parts and tools available:
  - Antistatic bag, one for each RPS and each component
  - Phillips (+) screwdriver, number 2

This topic describes:

Packing an EX Series RPS for Shipping

NOTE: **Packing an RPS for shipping requires two people if the RPS has been installed in a rack.**

To pack an RPS for shipping:

1. Disconnect power from the AC power source outlet by performing one of the following:
   - If the AC power source outlet has a power switch, set it to the OFF (0) position.
   - If the AC power source outlet does not have a power switch, gently pull out the male end of the power cord connected to the power source outlet.
2. Repeat Step 1 for each of the installed power supplies.
3. Remove all power cords that connect the RPS to the AC power source outlet.
4. Remove all RPS cables that connect the RPS to switches.
5. Remove all power supplies installed in the RPS (see "Removing a Power Supply from the EX Series RPS" on page 55).
6. If the RPS is installed in a rack or cabinet, have one person support the weight of the RPS while another person unscrews and removes the mounting screws.
7. Remove the RPS from the rack or cabinet and place the RPS in an antistatic bag.

8. Place the RPS in the shipping carton.
9. Place the packing foam on top of and around the RPS.
10. If you are returning power supplies with the RPS, pack them as instructed in "Packing an EX Series RPS Component for Shipping" on page 65.
11. Replace the accessory box on top of the packing foam.
12. Close the top of the cardboard shipping box and seal it with packing tape.
13. Write the RMA number on the exterior of the box to ensure proper tracking. See "Contacting Customer Support to Obtain Return Material Authorization" on page 63.

Packing an EX Series RPS Component for Shipping

CAUTION: **Do not stack power supplies. Return individual components in separate boxes if they do not fit together on one level in the shipping box.**

To pack an RPS power supply component for shipping:

1. Place individual power supplies in antistatic bags.
2. Ensure that each component is adequately protected with packing materials and packed so that components do not move around inside the carton.
3. Close the top of the cardboard shipping box and seal it with packing tape.
4. Write the RMA number on the exterior of the box to ensure proper tracking.

Related Documentation

- Removing a Power Supply from the EX Series RPS on page 55
- Unpacking an EX Series Redundant Power System on page 31

PART 5

Troubleshooting

CHAPTER 13

Troubleshooting Procedures

Troubleshooting the EX Series Redundant Power System Power On and Power Backup Issues

This topic provides troubleshooting information for problems related to the EX Series Redundant Power System (RPS). This topic describes:

The EX Series RPS Is Not Powering On

Problem

Description: The RPS does not power on even though it has a power supply installed and is connected to an AC power source outlet.

Environment: The RPS with one EX-PWR3-930-AC power supply installed in it is connected to a switch.

Symptoms: The SYS LED on the power supply side of the RPS is off, and when you check the RPS status using the CLI command **show chassis redundant-power-system**, the message **No RPS connected** is displayed.

Cause

A power supply must be installed in the middle slot on the RPS to power on the RPS.

Solution

Install a power supply in the middle slot on the power supply side of the RPS and verify that the AC power source outlet is properly connected to it. See "Installing a Power Supply in the EX Series Redundant Power System" on page 53.

Verify that the **AC OK** LED and the **DC OK** LED on the power supply in the RPS are lit green.

A Switch Is Not Recognized by the RPS

Problem **Description:** I can't set up the RPS.

Cause A switch must be active to be recognized by the RPS.

Solution Activate the switch by configuring it and issuing a commit statement.

An Error Message Indicates That an RPS Power Supply is Not Supported

Problem **Description:** An RPS error message indicates that an RPS power supply is not supported.

Cause RPS supports only one power supply, the EX-PWR3-930-AC. If you install another similar power supply, it may fit in the slot but it is not compatible with RPS.

Solution The power supply shipped with your RPS (in a separate box) is an EX-PWR3-930-AC. If you installed more power supplies, you ordered them separately. Replace any other power supply model (such as the EX-PWR2-930-AC) with an EX-PWR3-930-AC model.

The EX Series Redundant Power System Is Not Providing Power Backup to a Connected Switch

Problem **Description:** The RPS does not provide power backup to a connected switch.

Environment: The RPS has an EX-PWR3-930-AC power supply installed in the middle power supply slot and is connected to two switches with power loss, one connected to RPS switch connector port 1 and the other on port 2.

Symptoms: The status LED on the associated switch connector port is not blinking green—it is either solid green (connected) or not lit (off).

Cause The RPS provides backup power based on the power priority assigned to each switch.

Solution If the status LED on a switch connector port is off, ensure that the RPS cable is properly connected to both the RPS and the switch, and ensure that the priority configured for the switch is not 0. See **show redundant-power-system status**.

If the status LED on switch connector port 1 is on and is steadily green, check the backup priority configured for the switch and assign it a higher priority. See "Determining and Setting Priority for Switches Connected to an EX Series RPS" on page 47

If the status LED on switch connector port 1 is amber, check if the RPS has enough power supplies installed in it to provide backup power. if it does not, install a power supply in an empty power supply slot on the RPS. See "Installing a Power Supply in the EX Series Redundant Power System" on page 53.

If the status LED on switch connector port 1 is still off, check the priority configured for the switch. Ensure that the is not set to 0, which means off. See **show redundant-power-system status**. The priority assigned must be from 1 through 6. See "Determining and Setting Priority for Switches Connected to an EX Series RPS" on page 47.

Verify that a dedicated power supply is installed in the switch. The RPS cannot boot a switch that does not have a dedicated power supply. See "Installing a Power Supply in the EX Series Redundant Power System" on page 53.

Also keep in mind that when the command **request redundant-power-system multi-backup** has been set, support for switches that supply PoE is not guaranteed. To reverse this setting, use the command **request redundant-power-system no-multi-backup**.

The Wrong Switches Are Being Backed Up

Problem

Description: Four or more switches are connected to an RPS with three power supplies. When all four switches fail, the wrong three switches have .

Environment: Four or more switches are connected to an RPS with three power supplies. One or more switches provide PoE to other devices.

Symptoms: When all four switches fail, the wrong three switches have .

Cause

The RPS provides backup power based on the power priority assigned to each switch. This is derived from two configurations, one of which has precedence over the other one. Initial is derived from the location of the port used to attach a switch—the leftmost connector has lowest priority and the rightmost connector has highest priority. The second, dominant priority configuration is derived from a CLI priority setting on the switch itself. With this CLI configuration, 6 is highest priority and 1 is the lowest priority.

Solution

Connect the three switches to the three rightmost connectors on the RPS. Then, using the CLI on each switch, set each switch's priority to 1 using the **redundant-power-system** configuration command **redundant-power-system 1**. Now, physical connection location is determining .

If you do not want to change the cabling on the switches, you can use the configuration statement **redundant-power-system** on all four switches, assigning priority **6** (highest), **5**, **4** and **3** to the appropriate switches. Priority configuration on the switch always overcomes set by connector location.

Six Switches That Do Not Require PoE Are Not All Being Backed Up

Problem

Description: Only three switches out of six are simultaneously backed up when all switches experience power supply failure. None of these switches supply PoE power to any device.

Environment: The RPS with three EX-PWR3-930-AC power supplies installed in it is connected to six switches, none of which is connected to a non-PoE device.

Symptoms: Only three switches out of six are simultaneously backed up when all switches experience power supply failure. None of these switches supply PoE power to any device.

Cause

Each power supply can support two switches that do not need enough power for PoE, as long as you configure the RPS to do so.

Solution

From any of the attached switches, issue the **request redundant-power-system multi-backup** command from the operational mode. Now standard power will be supplied to two non-PoE switches per power supply.

Related Documentation

- Installing a Power Supply in the EX Series Redundant Power System on page 53
- Determining and Setting Priority for Switches Connected to an EX Series RPS on page 47
- LEDs on an EX Series Redundant Power System on page 11
- EX Series Redundant Power System Hardware Overview on page 4

CHAPTER 14

Alarms and Syslog Messages

Understanding Alarm Types and Severity Levels on EX Series Switches

NOTE: This topic applies only to the J-Web Application package.

Alarms alert you to conditions that might prevent normal operation of the switch. Before monitoring alarms on a Juniper Networks EX Series Ethernet switch, become familiar with the terms defined in Table 15 on page 73.

Table 15: Alarm Terms

Term	Definition
alarm	Signal alerting you to conditions that might prevent normal operation. On a switch, the alarm signal is the **ALM** LED lit on the front of the chassis.
alarm condition	Failure event that triggers an alarm.
alarm severity	Seriousness of the alarm. If the Alarm (**ALM**) LED is red, this indicates a major alarm. If the Alarm LED is yellow, this indicates a minor alarm. If the Alarm LED is unlit, there is no alarm or the switch is halted.
chassis alarm	Preset alarm triggered by a physical condition on the switch such as a power supply failure, excessive component temperature, or media failure.
system alarm	Preset alarm triggered by a missing rescue configuration or failure to install a license for a licensed software feature. NOTE: On EX6200 switches, a system alarm can be triggered by an internal link error.

Alarm Types

The switch supports these alarms:

- Chassis alarms indicate a failure on the switch or one of its components. Chassis alarms are preset and cannot be modified.
- System alarms indicate a missing rescue configuration. System alarms are preset and cannot be modified, although you can configure them to appear automatically in the J-Web interface display or the CLI display.

Alarm Severity Levels

Alarms on switches have two severity levels:

- Major (red)—Indicates a critical situation on the switch that has resulted from one of the following conditions. A red alarm condition requires immediate action.
  - One or more hardware components have failed.
  - One or more hardware components have exceeded temperature thresholds.
  - An alarm condition configured on an interface has triggered a critical warning.
- Minor (yellow or amber)—Indicates a noncritical condition on the switch that, if left unchecked, might cause an interruption in service or degradation in performance. A yellow alarm condition requires monitoring or maintenance.

  A missing rescue configuration generates a yellow system alarm.

Related Documentation

- Checking Active Alarms with the J-Web Interface on page 74
- *Dashboard for EX Series Switches*

Checking Active Alarms with the J-Web Interface

Purpose

NOTE: **This topic applies only to the J-Web Application package.**

Use the monitoring functionality to view alarm information for the EX Series switches including alarm type, alarm severity, and a brief description for each active alarm on the switching platform.

Action

To view the active alarms:

1. Select **Monitor** > **Events and Alarms** > **View Alarms** in the J-Web interface.
2. Select an alarm filter based on alarm type, severity, description, and date range.
3. Click **Go**.

   All the alarms matching the filter are displayed.

NOTE: When the switch is reset, the active alarms are displayed.

Meaning Table 16 on page 75 lists the alarm output fields.

Table 16: Summary of Key Alarm Output Fields

Field	Values
Type	Category of the alarm: • Chassis—Indicates an alarm condition on the chassis (typically an environmental alarm such as one related to temperature). • System—Indicates an alarm condition in the system.
Severity	Alarm severity—either major (red) or minor (yellow).
Description	Brief synopsis of the alarm.
Time	Date and time when the failure was detected.

Related Documentation

- Monitoring System Log Messages on page 75
- *Dashboard for EX Series Switches*
- Understanding Alarm Types and Severity Levels on EX Series Switches on page 73

Monitoring System Log Messages

Purpose

NOTE: This topic applies only to the J-Web Application package.

Use the monitoring functionality to filter and view system log messages for EX Series switches.

Action To view events in the J-Web interface, select **Monitor** > **Events and Alarms** > **View Events**.

Apply a filter or a combination of filters to view messages. You can use filters to display relevant events. Table 17 on page 76 describes the different filters, their functions, and the associated actions.

To view events in the CLI, enter the following command:

show log

Table 17: Filtering System Log Messages

Field	Function	Your Action
System Log File	Specifies the name of a system log file for which you want to display the recorded events. Lists the names of all the system log files that you configure. By default, a log file, **messages**, is included in the **/var/log/** directory.	To specify events recorded in a particular file, select the system log filename from the list—for example, **messages**. Select **Include archived files** to include archived files in the search.
Process	Specifies the name of the process generating the events you want to display. To view all the processes running on your system, enter the CLI command **show system processes**. For more information about processes, see the *Junos OS Installation and Upgrade Guide*.	To specify events generated by a process, type the name of the process. For example, type **mgd** to list all messages generated by the management process.
Date From To	Specifies the time period in which the events you want displayed are generated. Displays a calendar that allows you to select the year, month, day, and time. It also allows you to select the local time. By default, the messages generated during the last one hour are displayed. End Time shows the current time and Start Time shows the time one hour before End Time.	To specify the time period: • Click the **Calendar** icon and select the year, month, and date—for example, **02/10/2007**. • Click the **Calendar** icon and select the year, month, and date—for example, **02/10/2007**. • Click to select the time in hours, minutes, and seconds.
Event ID	Specifies the event ID for which you want to display the messages. Allows you to type part of the ID and completes the remainder automatically. An event ID, also known as a system log message code, uniquely identifies a system log message. It begins with a prefix that indicates the generating software process or library.	To specify events with a specific ID, type the partial or complete ID—for example, **TFTPD_AF_ERR**.
Description	Specifies text from the description of events that you want to display. Allows you to use regular expressions to match text from the event description. NOTE: Regular expression matching is case-sensitive.	To specify events with a specific description, type a text string from the description with regular expression. For example, type **^Initial*** to display all messages with lines beginning with the term *Initial*.
Search	Applies the specified filter and displays the matching messages.	To apply the filter and display messages, click **Search**.

Table 17: Filtering System Log Messages *(continued)*

Field	Function	Your Action
Reset	Resets all the fields in the Events Filter box.	To reset the field values that are listed in the Events Filter box, click **Reset**.
Generate Raw Report NOTE: • Starting in Junos OS Release 14.1X53, a Raw Report can be generated from the log messages being loaded in the Events Detail table.The Generate Raw Report button is enabled after the event log messages start loading in the Events Detail table. • After the log messages are completely loaded in the Events Detail table, Generate Raw Report changes to Generate Report.	Generates a list of event log messages in nontabular format.	To generate a raw report: 1. Click **Generate Raw Report**. The *Opening filteredEvents.html* window appears. 2. Select **Open with** to open the HTML file or select **Save File** to save the file. 3. Click **OK**.
Generate Report NOTE: Starting in Junos OS Release 14.1X53, a Formatted Report can be generated from event log messages being loaded in an Events Detail table.The Generate Report button appears only after event log messages are completely loaded in the Events Detail table. The Generate Raw Report button is displayed while event log messages are being loaded.	Generates a list of event log messages in tabular format, which shows system details, events filter criteria, and event details.	To generate a formatted report: 1. Click **Generate Report**. The *Opening Report.html* window appears. 2. Select **Open with** to open the HTML file or select **Save File** to save the file. 3. Click **OK**.

Meaning Table 18 on page 78 describes the Event Summary fields.

NOTE: By default, the View Events page in the J-Web interface displays the most recent 25 events, with severity levels highlighted in different colors. After you specify the filters, Event Summary displays the events matching the specified filters. Click the First, Next, Prev, and Last links to navigate through messages.

Table 18: Viewing System Log Messages

Field	Function	Additional Information
Process	Displays the name and ID of the process that generated the system log message.	The information displayed in this field is different for messages generated on the local Routing Engine than for messages generated on another Routing Engine (on a system with two Routing Engines installed and operational). Messages from the other Routing Engine also include the identifiers **re0** and **re1** that identify the Routing Engine.
Severity	Severity level of a message is indicated by different colors. • **Unknown**—Gray—Indicates no severity level is specified. • **Debug/Info/Notice**—Green—Indicates conditions that are not errors but are of interest or might warrant special handling. • **Warning**—Yellow—Indicates conditions that warrant monitoring. • **Error**—Blue—Indicates standard error conditions that generally have less serious consequences than errors in the emergency, alert, and critical levels. • **Critical**—Pink—Indicates critical conditions, such as hard-drive errors. • **Alert**—Orange—Indicates conditions that require immediate correction, such as a corrupted system database. • **Emergency**—Red—Indicates system panic or other conditions that cause the switch to stop functioning.	A severity level indicates how seriously the triggering event affects switch functions. When you configure a location for logging a facility, you also specify a severity level for the facility. Only messages from the facility that are rated at that level or higher are logged to the specified file.
Event ID	Displays a code that uniquely identifies the message. The prefix on each code identifies the message source, and the rest of the code indicates the specific event or error.	The event ID begins with a prefix that indicates the generating software process. Some processes on a switch do not use codes. This field might be blank in a message generated from such a process. An event can belong to one of the following type categories: • **Error**—Indicates an error or failure condition that might require corrective action. • **Event**—Indicates a condition or occurrence that does not generally require corrective action.
Event Description	Displays a more detailed explanation of the message.	
Time	Displays the time at which the message was logged.	

Release History Table

Release	Description
14.1X53	Starting in Junos OS Release 14.1X53, a Raw Report can be generated from the log messages being loaded in the Events Detail table.
14.1X53	Starting in Junos OS Release 14.1X53, a Formatted Report can be generated from event log messages being loaded in an Events Detail table.

Related Documentation

- Checking Active Alarms with the J-Web Interface on page 74
- Understanding Alarm Types and Severity Levels on EX Series Switches on page 73

PART 6

Configuration Statements and Operational Commands

CHAPTER 15

Configuration Statements

member (Redundant Power System)

Syntax

```
member vc-member-number {
  priority (0|1|2|3|4|5|6);
}
```

Hierarchy Level

[edit redundant-power-system]

Release Information

Statement introduced in Junos OS Release 12.1 for EX Series switches.

Description

Specify the Virtual Chassis member ID of a switch connected to the Redundant Power System (RPS) for backup power supply. The member ID is required only for switches that can be configured in a Virtual Chassis. If the switch has never been configured in a Virtual Chassis, the value is always 0.

Options

member-number—Member ID of a switch that has Virtual Chassis capability that is connected to the RPS.

Range: 0 through maximum members in the Virtual Chassis

Default: 0

The remaining statement is explained separately. See CLI Explorer.

Required Privilege Level

admin—To view this statement in the configuration.
admin-control—To add this statement to the configuration.

Related Documentation

- Determining and Setting Priority for Switches Connected to an EX Series RPS on page 47

priority (Redundant Power System)

Syntax

priority (0|1|2|3|4|5|6);

Hierarchy Level

[edit redundant-power-system member]
[edit redundant-power-system member *member-number*]

Release Information

Statement introduced in Junos OS Release 12.1 for EX Series switches.

Description

Configure the backup of any switch connected to the Redundant Power System (RPS) using the CLI on each switch. The determines the order in which the RPS supplies backup power to the switches connected to the RPS. 6 is the highest priority and 1 is lowest. Zero means off or no RPS backup.

If the switch is not reconfigured from the CLI, the default priority is 1. In this case, priority is determined by connector location with the rightmost connector having the highest priority.

For switches that can only be used as standalone switches, this hierarchy level is used for configuration:

[edit redundant-power-system]

For switches that can be used either as standalone switches or configured in a Virtual Chassis, this hierarchy level is used for configuration:

[edit redundant-power-system member *vc-member-number*]

If two or more connections are assigned the same , then the power of each connection is determined based on its switch connector port location, with the rightmost port receiving power first.

Required Privilege Level

admin—To view this statement in the configuration.
admin-control—To add this statement to the configuration.

Related Documentation

- Determining and Setting Priority for Switches Connected to an EX Series RPS on page 47

redundant-power-system

Syntax

EX2200 switch:

```
redundant-power-system {
  priority (0|1|2|3|4|5|6)
  }
}
```

EX3300 switch:

```
redundant-power-system {
  member vc-member-number {
    priority (0|1|2|3|4|5|6)
  }
}
```

Hierarchy Level

[edit]

Release Information

Statement introduced in Junos OS Release 12.1 for EX Series switches.

Description

Configure Redundant Power System (RPS) member to ensure higher- switches always receive power backup.

The remaining statements are explained separately. See CLI Explorer.

Required Privilege Level

admin—To view this statement in the configuration.
admin-control—To add this statement to the configuration.

Related Documentation

- Determining and Setting Priority for Switches Connected to an EX Series RPS on page 47

CHAPTER 16

Operational Commands

request redundant-power-system multi-backup

Syntax

EX2200 switch:

```
request redundant-power-system multi-backup
request redundant-power-system no-multi-backup
```

EX3300 switch:

```
request redundant-power-system multi-backup member member-number

request redundant-power-system no-multi-backup member member-number
```

Release Information

Command introduced in Junos OS Release 12.1 for EX Series switches.

Description

Configure a redundant power system (RPS) to back up six non-Power-over-Ethernet (PoE) powered switches instead of the default which is to back up three PoE-powered switches.

Required Privilege Level

admin—To view this statement in the configuration.
admin-control—To add this statement to the configuration.

Related Documentation

- EX Series Redundant Power System Hardware Overview on page 4

List of Sample Output

request redundant-power-system multi-backup on page 88

Sample Output

request redundant-power-system multi-backup

```
user@switch> request redundant-power-system multi-backup member 1
Sending multi-backup setting to RPS
```

show chassis redundant-power-system

Syntax show chassis redundant-power-system

Release Information Command introduced in Junos OS Release 12.1 for EX Series switches.

Description Display information about the Redundant Power Systems (RPS) connected to the switch.

Required Privilege Level view

Related Documentation
- Determining and Setting Priority for Switches Connected to an EX Series RPS on page 47

List of Sample Output
show chassis redundant-power-system (Standalone Switch) on page 89
show chassis redundant-power-system (Virtual Chassis member) on page 90

Output Fields Table 19 on page 89 lists the output fields for the **show chassis redundant-power-system** command. Output fields are listed in the approximate order in which they appear.

Table 19: show chassis redundant-power-system Output Fields

Field Name	Field Description	Level of Output
Member	Member number of the switch connected to the RPS—For a switch that has never been configured in a Virtual Chassis, the value is always zero. For a Virtual Chassis member, the range is zero through the maximum number of members in the Virtual Chassis.	All levels
Status	Status of the RPS: • ARMED—The switch is ready to get backup power from the RPS if power supply fails on the switch. • OFF—The switch has zero and is not configured to receive backup power from the RPS. • BACKED-UP—The switch is receiving power backup from the RPS. • OVER-SUBSCRIBED—The switch cannot receive backup power from the RPS even if you set the .	All levels
RPS	Serial number of the RPS.	
Port	Number of the switch connector on the RPS that is connected to a switch.	All levels

Sample Output

show chassis redundant-power-system (Standalone Switch)

```
user@switch> show chassis redundant-power-system

Member Status      RPS            Port
```

```
  0    Armed       CG0209121807   0
```

show chassis redundant-power-system (Virtual Chassis member)

```
user@switch> show chassis redundant-power-system

Member Status      RPS            Port
  0    Armed       CG0209121814   5
  2    Armed       CG0209121815   4
```

show redundant-power-system led

Syntax show redundant-power-system led

Release Information Command introduced in Junos OS Release 12.1 for EX Series switches.

Description Display information about fan status, Redundant Power System (RPS) status, and the switch connectors as displayed by the corresponding LEDs on the RPS.

Required Privilege Level view

Related Documentation
- LEDs on an EX Series Redundant Power System on page 11

List of Sample Output
show redundant-power-system led (Standalone Switch) on page 92
show redundant-power-system led (EX3300 Virtual Chassis) on page 92

Output Fields Table 20 on page 91 lists the output fields for the **show redundant-power-system led** command. Output fields are listed in the approximate order in which they appear.

Table 20: show redundant-power-system led Output Fields

Field Name	Field Description	Level of Output
RPS	The serial number of the RPS.	
RPS Fan	Status of the RPS power supply fans as displayed by the LED: • Green—All RPS power supply fans are operating fine. • Amber—A fan has failed in at least one RPS power supply.	All levels
RPS System Status	Status of the RPS system as displayed by the LED: • Green—The RPS is active. • Blinking green—The RPS is booting. • Amber—An RPS power supply has failed. • Off—The RPS is off.	All levels
RPS Port LED Status	Status of the RPS switch connectors as displayed by the LEDs. These LEDs indicate whether the redundant power source is being used. • Green—The RPS connector is enabled and connected to a switch but the RPS is not actively backing up the switch. • Blinking green—The RPS is backing up the switch connected to the port. • Off—The RPS connector is not connected to a switch. • Amber—The RPS is oversubscribed and the backup power to the switch has failed.	All levels
Port	Number of one of the six switch connectors on the RPS.	All levels

Table 20: show redundant-power-system led Output Fields *(continued)*

Field Name	Field Description	Level of Output
Status	Status of each switch connector on the RPS.	All levels

Sample Output

show redundant-power-system led (Standalone Switch)

```
user@switch> show redundant-power-system led

Gathering requested information.
RPS-CG0209121807
    RPS Fan: GREEN
    RPS System Status: GREEN
RPS Port LED Status
Port  Status
   0  GREEN
   1  OFF
   2  OFF
   3  OFF
   4  OFF
   5  OFF
```

show redundant-power-system led (EX3300 Virtual Chassis)

```
user@switch> show redundant-power-system led

Gathering requested information.
RPS-CG0209121814
    RPS Fan: GREEN
    RPS System Status: GREEN
RPS Port LED Status
Port  Status
   0  OFF
   1  OFF
   2  OFF
   3  OFF
   4  OFF
   5  GREEN
RPS-CG0209121815
    RPS Fan: GREEN
    RPS System Status: GREEN
RPS Port LED Status
Port  Status
   0  OFF
   1  OFF
   2  OFF
   3  OFF
   4  GREEN
   5  OFF
```

show redundant-power-system multi-backup

Syntax

show redundant-power-system multi-backup

show redundant-power-system multi-backup member *member-number*

Release Information

Command introduced in Junos OS Release 12.1 for EX Series switches.

Description

Display the current status of the Redundant Power System's (RPS's) ability to back up two switches per power supply when enough power to support Power over Ethernet (PoE) is not needed. This ability is referred to as the RPS's multi-backup ability.

Required Privilege Level

view

Related Documentation

- request redundant-power-system multi-backup on page 88

List of Sample Output

show redundant-power-system multi-backup on page 93

Sample Output

show redundant-power-system multi-backup

```
User@switch> show redundant-power-system multi-backup
Requesting information from redundant-power-system..     Multi-Backup: enabled
```

show redundant-power-system network

Syntax show redundant-power-system network

Release Information Command introduced in Junos OS Release 12.1 for EX Series switches.

Description Display the Redundant Power Supply (RPS) IP address, netmask address, and gateway address required for firmware backup.

Required Privilege Level view

Related Documentation

- Upgrading Firmware on an EX Series Redundant Power System on page 57

List of Sample Output show redundant-power-system network on page 94

Sample Output

show redundant-power-system network

```
user@switch> show redundant-power-system network
 Requesting information from redundant-power-system..
    IP Address:   10.93.2.38
    Netmask: 255.255.254.0
    Gateway:  10.93.3.254
```

show redundant-power-system power-supply

Syntax show redundant-power-system power-supply

Release Information Command introduced in Junos OS Release 12.1 for EX Series switches.

Description Display information about the power supplies installed in the Redundant Power System (RPS). After installing a power supply, we recommend that you use this command to be sure that the power supply installed correctly.

Required Privilege Level view

Related Documentation

- Installing a Power Supply in the EX Series Redundant Power System on page 53

List of Sample Output

show redundant-power-system power-supply (Standalone Switch) on page 95
show redundant-power-system power-supply (EX3300 Virtual Chassis) on page 96

Output Fields Table 21 on page 95 lists the output fields for the **show redundant-power-system power-supply** command. Output fields are listed in the approximate order in which they appear.

Table 21: show redundant-power-system power-supply Output Fields

Field Name	Field Description	Level of Output
RPS	Serial number of the RPS.	All levels
PSU Slot	Number of the power supply slot. Slots are numbered 1 through 3.	All levels
Status	Status of the power supply slots: • Present—The slot contains an RPS power supply. • Empty—The slot is empty.	All levels
Description	Description of the RPS power supply installed in the slot.	All levels

Sample Output

show redundant-power-system power-supply (Standalone Switch)

```
user@switch> show redundant-power-system power-supply

Gathering requested information.
RPS-CG0209121807
PSU Slot Status    Description
       1 Online    930W AC
       2 offline     ---
       3 Online    930W AC
```

show redundant-power-system power-supply (EX3300 Virtual Chassis)

```
user@switch> show redundant-power-system power-supply

Gathering requested information.
RPS-CG0209121814
PSU Slot Status    Description
       1 Online    930W AC
       2 offline     ---
       3 Online    930W AC
RPS-CG0209121815
PSU Slot Status    Description
       1 Online    930W AC
       2 Online    930W AC
       3 Online    930W AC
```

show redundant-power-system status

Syntax show redundant-power-system status

Release Information Command introduced in Junos OS Release 12.1 for EX Series switches.

Description Display the status information for the switch connectors on the Redundant Power System (RPS).

Required Privilege Level view

Related Documentation
- Determining and Setting Priority for Switches Connected to an EX Series RPS on page 47
- Installing a Power Supply in the EX Series Redundant Power System on page 53

List of Sample Output
show redundant-power-system status (Standalone Switch) on page 97
show redundant-power-system status (EX3300 Virtual Chassis) on page 98

Output Fields Table 22 on page 97 lists the output fields for the **show redundant-power-system status** command. Output fields are listed in the approximate order in which they appear.

Table 22: show redundant-power-system status Output Fields

Field Name	Field Description	Level of Output
RPS	Serial number of the RPS.	All levels
Port	Number of the switch connector.	All levels
Status	Status of the switch connector: • ARMED—The switch is ready to get backup power from RPS if power supply fails on the switch. • OFF—The switch has zero and is not configured to receive backup power from RPS. • BACKED-UP—The switch is receiving power backup from RPS. • OVER-SUBSCRIBED—The switch cannot receive backup power from RPS even if you set the .	All levels
Priority	Priority value of the switch connector.	All levels
Power-Requested	Power requested by the switch on the corresponding switch connector.	All levels

Sample Output

show redundant-power-system status (Standalone Switch)

```
user@switch> show redundant-power-system status
```

```
Gathering requested information.
RPS-CG0209121807
Port Status        Power-requested
  0  Armed        3         930W
  1  Off          1         ---
  2  Off          1         ---
  3  Off          1         ---
  4  Off          1         ---
  5  Off          1         ---
```

show redundant-power-system status (EX3300 Virtual Chassis)

```
user@switch> show redundant-power-system status

Gathering requested information.
RPS-CG0209121814
Port Status        Power-requested
  0  OFF          1         ---
  1  OFF          1         ---
  2  OFF          1         ---
  3  OFF          1         ---
  4  OFF          1         ---
  5  Armed        5         930W
RPS-CG0209121815
Port Status        Power-requested
  0  OFF          1         ---
  1  OFF          1         ---
  2  OFF          1         ---
  3  OFF          1         ---
  4  Armed        4         930W
  5  OFF          1         ---
```

show redundant-power-system upgrade

Syntax show redundant-power-system upgrade

Release Information Command introduced in Junos OS Release 12.1 for EX Series switches.

Description Display RPS firmware upgrade status (pass or fail), previous RPS firmware version, and current RPS firmware version.

Required Privilege Level view

Related Documentation
- request redundant-power-system multi-backup on page 88

List of Sample Output show redundant-power-system upgrade on page 99

Output Fields Table 23 on page 99 lists the output fields for the **show redundant-power-system status** command. Output fields are listed in the approximate order in which they appear.

Table 23: show redundant-power-system upgrade Output Fields

Field Name	Field Description	Level of Output
Firmware Upgrade Status	Indicates whether the upgrade passed or failed	All levels
Previous Firmware Version	Firmware version before the upgrade	All levels
Current Firmware Version	Firmware version after the upgrade	

Sample Output

show redundant-power-system upgrade

```
user@switch> show redundant-power-system upgrade
Requesting information from redundant-power-system..
Firmware Upgrade Status:   Pass
Previous Firmware Version: 1.0
Current Firmware Version:  1.0
```

show redundant-power-system version

Syntax show redundant-power-system version

Release Information Command introduced in Junos OS Release 12.1 for EX Series switches.

Description Display version information about the Redundant Power System (RPS).

Required Privilege Level view

Related Documentation

- Installing a Power Supply in the EX Series Redundant Power System on page 53
- Packing an EX Series Redundant Power System or Redundant Power System Components for Shipping on page 63

List of Sample Output

show redundant-power-system version (Standalone Switch) on page 100
show redundant-power-system version (EX3300 Virtual Chassis) on page 100

Output Fields Table 24 on page 100 lists the output fields for the **show redundant-power-system version** command. Output fields are listed in the approximate order in which they appear.

Table 24: show redundant-power-system version Output Fields

Field Name	Field Description	Level of Output
RPS	Serial number of the RPS.	All levels
Model	Model name of the RPS.	All levels
RPS Firmware Version	Version number of the firmware installed on the RPS.	All levels
RPS U-Boot Version	Version of the bootup software installed on the RPS.	All levels

Sample Output

show redundant-power-system version (Standalone Switch)

```
user@switch> show redundant-power-system version

   RPS-CG0209121807
     Model: EX-PWR_RPS200
     RPS Firmware Version [1.0]
     RPS U-Boot   Version [1.1.6]
```

show redundant-power-system version (EX3300 Virtual Chassis)

```
user@switch> show redundant-power-system version

   RPS-CG0209121814
```



```
  Model: EX-PWR_RPS200
  RPS Firmware Version [1.0]
  RPS U-Boot   Version [1.1.6]
RPS-CG0209121815
  Model: EX-PWR_RPS200
  RPS Firmware Version [1.0]
  RPS U-Boot   Version [1.1.6]
```

PART 7

Safety and Compliance Information

CHAPTER 17

General Safety Guidelines and Warnings

General Safety Guidelines and Warnings

The following guidelines help ensure your safety and protect the device from damage. The list of guidelines might not address all potentially hazardous situations in your working environment, so be alert and exercise good judgment at all times.

- Perform only the procedures explicitly described in the hardware documentation for this device. Make sure that only authorized service personnel perform other system services.
- Keep the area around the device clear and free from dust before, during, and after installation.
- Keep tools away from areas where people could trip over them while walking.
- Do not wear loose clothing or jewelry, such as rings, bracelets, or chains, which could become caught in the device.
- Wear safety glasses if you are working under any conditions that could be hazardous to your eyes.
- Do not perform any actions that create a potential hazard to people or make the equipment unsafe.
- Never attempt to lift an object that is too heavy for one person to handle.
- Never install or manipulate wiring during electrical storms.
- Never install electrical jacks in wet locations unless the jacks are specifically designed for wet environments.
- Operate the device only when it is properly grounded.
- Ensure that the separate protective earthing terminal provided on this device is permanently connected to earth.
- Replace fuses only with fuses of the same type and rating.

- Do not open or remove chassis covers or sheet-metal parts unless instructions are provided in the hardware documentation for this device. Such an action could cause severe electrical shock.
- Do not push or force any objects through any opening in the chassis frame. Such an action could result in electrical shock or fire.
- Avoid spilling liquid onto the chassis or onto any device component. Such an action could cause electrical shock or damage the device.
- Avoid touching uninsulated electrical wires or terminals that have not been disconnected from their power source. Such an action could cause electrical shock.
- Always ensure that all modules, power supplies, and cover panels are fully inserted and that the installation screws are fully tightened.

Related Documentation

- AC Power Electrical Safety Guidelines on page 130
- *DC Power Electrical Safety Guidelines for Switches*
- General Electrical Safety Guidelines and Warnings on page 127
- Maintenance and Operational Safety Guidelines and Warnings on page 121
- Installation Instructions Warning on page 113
- Grounded Equipment Warning on page 120

Definitions of Safety Warning Levels

The documentation uses the following levels of safety warnings (there are two *Warning* formats):

NOTE: You might find this information helpful in a particular situation, or you might overlook this important information if it was not highlighted in a Note.

CAUTION: You need to observe the specified guidelines to prevent minor injury or discomfort to you or severe damage to the device.

WARNING: This symbol alerts you to the risk of personal injury from a laser.

WARNING: This symbol means danger. You are in a situation that could cause bodily injury. Before you work on any equipment, be aware of the hazards involved with electrical circuitry and be familiar with standard practices for preventing accidents.

Waarschuwing Dit waarschuwingssymbool betekent gevaar. U verkeert in een situatie die lichamelijk letsel kan veroorzaken. Voordat u aan enige apparatuur gaat werken, dient u zich bewust te zijn van de bij elektrische schakelingen betrokken risico's en dient u op de hoogte te zijn van standaard maatregelen om ongelukken te voorkomen.

Varoitus Tämä varoitusmerkki merkitsee vaaraa. Olet tilanteessa, joka voi johtaa ruumiinvammaan. Ennen kuin työskentelet minkään laitteiston parissa, ota selvää sähkökytkentöihin liittyvistä vaaroista ja tavanomaisista onnettomuuksien ehkäisykeinoista.

Attention Ce symbole d'avertissement indique un danger. Vous vous trouvez dans une situation pouvant causer des blessures ou des dommages corporels. Avant de travailler sur un équipement, soyez conscient des dangers posés par les circuits électriques et familiarisez-vous avec les procédures couramment utilisées pour éviter les accidents.

Warnung Dieses Warnsymbol bedeutet Gefahr. Sie befinden sich in einer Situation, die zu einer Körperverletzung führen könnte. Bevor Sie mit der Arbeit an irgendeinem Gerät beginnen, seien Sie sich der mit elektrischen Stromkreisen verbundenen Gefahren und der Standardpraktiken zur Vermeidung von Unfällen bewußt.

Avvertenza Questo simbolo di avvertenza indica un pericolo. La situazione potrebbe causare infortuni alle persone. Prima di lavorare su qualsiasi apparecchiatura, occorre conoscere i pericoli relativi ai circuiti elettrici ed essere al corrente delle pratiche standard per la prevenzione di incidenti.

Advarsel Dette varselsymbolet betyr fare. Du befinner deg i en situasjon som kan føre til personskade. Før du utfører arbeid på utstyr, må du vare oppmerksom på de faremomentene som elektriske kretser innebærer, samt gjøre deg kjent med vanlig praksis når det gjelder å unngå ulykker.

Aviso Este símbolo de aviso indica perigo. Encontra-se numa situação que lhe poderá causar danos físicos. Antes de começar a trabalhar com qualquer equipamento, familiarize-se com os perigos relacionados com circuitos eléctricos, e com quaisquer práticas comuns que possam prevenir possíveis acidentes.

¡Atención! Este símbolo de aviso significa peligro. Existe riesgo para su integridad física. Antes de manipular cualquier equipo, considerar los riesgos que entraña la corriente eléctrica y familiarizarse con los procedimientos estándar de prevención de accidentes.

Varning! Denna varningssymbol signalerar fara. Du befinner dig i en situation som kan leda till personskada. Innan du utför arbete på någon utrustning måste du vara medveten om farorna med elkretsar och känna till vanligt förfarande för att förebygga skador.

Related Documentation

- General Safety Guidelines and Warnings on page 105
- Installation Instructions Warning on page 113
- Maintenance and Operational Safety Guidelines and Warnings on page 121
- Grounded Equipment Warning on page 120
- *Laser and LED Safety Guidelines and Warnings*
- *Laser and LED Safety Guidelines and Warnings for the QFX Series*
- *Laser and LED Safety Guidelines and Warnings for the PTX Series*
- Warning Statement for Norway and Sweden on page 109

Qualified Personnel Warning

WARNING: **Only trained and qualified personnel should install or replace the device.**

Waarschuwing Installatie en reparaties mogen uitsluitend door getraind en bevoegd personeel uitgevoerd worden.

Varoitus Ainoastaan koulutettu ja pätevä henkilökunta saa asentaa tai vaihtaa tämän laitteen.

Attention Tout installation ou remplacement de l'appareil doit être réalisé par du personnel qualifié et compétent.

Warnung Gerät nur von geschultem, qualifiziertem Personal installieren oder auswechseln lassen.

Avvertenza Solo personale addestrato e qualificato deve essere autorizzato ad installare o sostituire questo apparecchio.

Advarsel Kun kvalifisert personell med riktig opplæring bør montere eller bytte ut dette utstyret.

Aviso Este equipamento deverá ser instalado ou substituído apenas por pessoal devidamente treinado e qualificado.

¡Atención! Estos equipos deben ser instalados y reemplazados exclusivamente por personal técnico adecuadamente preparado y capacitado.

Varning! Denna utrustning ska endast installeras och bytas ut av utbildad och kvalificerad personal.

Related Documentation

- General Safety Guidelines and Warnings on page 105
- General Electrical Safety Guidelines and Warnings on page 127
- AC Power Electrical Safety Guidelines on page 130

- *DC Power Electrical Safety Guidelines for Switches*

Warning Statement for Norway and Sweden

WARNING: The equipment must be connected to an earthed mains socket-outlet.

Advarsel Apparatet skal kobles til en jordet stikkontakt.

Varning! Apparaten skall anslutas till jordat nätuttag.

Related Documentation

- General Safety Guidelines and Warnings on page 105

CHAPTER 18

Fire Safety Requirements

Fire Safety Requirements

In the event of a fire emergency, the safety of people is the primary concern. You should establish procedures for protecting people in the event of a fire emergency, provide safety training, and properly provision fire-control equipment and fire extinguishers.

In addition, you should establish procedures to protect your equipment in the event of a fire emergency. Juniper Networks products should be installed in an environment suitable for electronic equipment. We recommend that fire suppression equipment be available in the event of a fire in the vicinity of the equipment and that all local fire, safety, and electrical codes and ordinances be observed when you install and operate your equipment.

Fire Suppression

In the event of an electrical hazard or an electrical fire, you should first turn power off to the equipment at the source. Then use a Type C fire extinguisher, which uses noncorrosive fire retardants, to extinguish the fire.

Fire Suppression Equipment

Type C fire extinguishers, which use noncorrosive fire retardants such as carbon dioxide and Halotron™, are most effective for suppressing electrical fires. Type C fire extinguishers displace oxygen from the point of combustion to eliminate the fire. For extinguishing fire on or around equipment that draws air from the environment for cooling, you should use this type of inert oxygen displacement extinguisher instead of an extinguisher that leaves residues on equipment.

Do not use multipurpose Type ABC chemical fire extinguishers (dry chemical fire extinguishers). The primary ingredient in these fire extinguishers is monoammonium phosphate, which is very sticky and difficult to clean. In addition, in the presence of minute amounts of moisture, monoammonium phosphate can become highly corrosive and corrodes most metals.

Any equipment in a room in which a chemical fire extinguisher has been discharged is subject to premature failure and unreliable operation. The equipment is considered to be irreparably damaged.

NOTE: To keep warranties effective, do not use a dry chemical fire extinguisher to control a fire at or near a Juniper Networks device. If a dry chemical fire extinguisher is used, the unit is no longer eligible for coverage under a service agreement.

We recommend that you dispose of any irreparably damaged equipment in an environmentally responsible manner.

Related Documentation

- General Safety Guidelines and Warnings on page 105
- General Electrical Safety Guidelines and Warnings on page 127
- Action to Take After an Electrical Accident on page 128

CHAPTER 19

Installation and Maintenance Safety Information

Installation Instructions Warning

WARNING: **Read the installation instructions before you connect the device to a power source.**

Waarschuwing Raadpleeg de installatie-aanwijzingen voordat u het systeem met de voeding verbindt.

Varoitus Lue asennusohjeet ennen järjestelmän yhdistämistä virtalähteeseen.

Attention Avant de brancher le système sur la source d'alimentation, consulter les directives d'installation.

Warnung Lesen Sie die Installationsanweisungen, bevor Sie das System an die Stromquelle anschließen.

Avvertenza Consultare le istruzioni di installazione prima di collegare il sistema all'alimentatore.

Advarsel Les installasjonsinstruksjonene før systemet kobles til strømkilden.

Aviso Leia as instruções de instalação antes de ligar o sistema à sua fonte de energia.

¡Atención! Ver las instrucciones de instalación antes de conectar el sistema a la red de alimentación.

Varning! Läs installationsanvisningarna innan du kopplar systemet till dess strömförsörjningsenhet.

Related Documentation

- General Safety Guidelines and Warnings on page 105
- *Laser and LED Safety Guidelines and Warnings*
- Grounded Equipment Warning on page 120

Chassis Lifting Guidelines

- Before moving the device to a site, ensure that the site meets the power, environmental, and clearance requirements.
- Before lifting or moving the device, disconnect all external cables and wires.
- As when lifting any heavy object, ensure that most of the weight is borne by your legs rather than your back. Keep your knees bent and your back relatively straight. Do not twist your body as you lift. Balance the load evenly and be sure that your footing is firm.
- Use the following lifting guidelines to lift routing devices and components:
  - Up to 39.7 lb (18 kg): One person.
  - 39.7 lb (18 kg) to 70.5 lb (32 kg): Two or more people.
  - 70.5 lb (32 kg) to 121.2 lb (55 kg): Three or more people.
  - Above 121.2 lbs (55 kg): Material handling systems (such as levers, slings, lifts and so on) must be used. When this is not practical, specially trained persons or systems must be used (riggers or movers).

Related Documentation

- General Safety Guidelines and Warnings on page 105
- Installation Instructions Warning on page 113

Restricted Access Warning

WARNING: **This unit is intended for installation in restricted access areas. A restricted access area is an area to which access can be gained only by service personnel through the use of a special tool, lock and key, or other means of security, and which is controlled by the authority responsible for the location.**

Waarschuwing Dit toestel is bedoeld voor installatie op plaatsen met beperkte toegang. Een plaats met beperkte toegang is een plaats waar toegang slechts door servicepersoneel verkregen kan worden door middel van een speciaal instrument, een slot en sleutel, of een ander veiligheidsmiddel, en welke

beheerd wordt door de overheidsinstantie die verantwoordelijk is voor de locatie.

Varoitus Tämä laite on tarkoitettu asennettavaksi paikkaan, johon pääsy on rajoitettua. Paikka, johon pääsy on rajoitettua, tarkoittaa paikkaa, johon vain huoltohenkilöstö pääsee jonkin erikoistyökalun, lukkoon sopivan avaimen tai jonkin muun turvalaitteen avulla ja joka on paikasta vastuussa olevien toimivaltaisten henkilöiden valvoma.

Attention Cet appareil est à installer dans des zones d'accès réservé. Ces dernières sont des zones auxquelles seul le personnel de service peut accéder en utilisant un outil spécial, un mécanisme de verrouillage et une clé, ou tout autre moyen de sécurité. L'accès aux zones de sécurité est sous le contrôle de l'autorité responsable de l'emplacement.

Warnung Diese Einheit ist zur Installation in Bereichen mit beschränktem Zutritt vorgesehen. Ein Bereich mit beschränktem Zutritt ist ein Bereich, zu dem nur Wartungspersonal mit einem Spezialwerkzeugs, Schloß und Schlüssel oder anderer Sicherheitsvorkehrungen Zugang hat, und der von dem für die Anlage zuständigen Gremium kontrolliert wird.

Avvertenza Questa unità deve essere installata in un'area ad accesso limitato. Un'area ad accesso limitato è un'area accessibile solo a personale di assistenza tramite un'attrezzo speciale, lucchetto, o altri dispositivi di sicurezza, ed è controllata dall'autorità responsabile della zona.

Advarsel Denne enheten er laget for installasjon i områder med begrenset adgang. Et område med begrenset adgang gir kun adgang til servicepersonale som bruker et spesielt verktøy, lås og nøkkel, eller en annen sikkerhetsanordning, og det kontrolleres av den autoriteten som er ansvarlig for området.

Aviso Esta unidade foi concebida para instalação em áreas de acesso restrito. Uma área de acesso restrito é uma área à qual apenas tem acesso o pessoal de serviço autorizado, que possua uma ferramenta, chave e fechadura especial, ou qualquer outra forma de segurança. Esta área é controlada pela autoridade responsável pelo local.

¡Atención! Esta unidad ha sido diseñada para instalarse en áreas de acceso restringido. Área de acceso restringido significa un área a la que solamente tiene acceso el personal de servicio mediante la utilización de una herramienta especial, cerradura con llave, o algún otro medio de seguridad, y que está bajo el control de la autoridad responsable del local.

Varning! Denna enhet är avsedd för installation i områden med begränsat tillträde. Ett område med begränsat tillträde får endast tillträdas av servicepersonal med ett speciellt verktyg, lås och nyckel, eller annan säkerhetsanordning, och kontrolleras av den auktoritet som ansvarar för området.

Related Documentation

- General Safety Guidelines and Warnings on page 105
- General Electrical Safety Guidelines and Warnings on page 127
- Installation Instructions Warning on page 113
- Grounded Equipment Warning on page 120

Ramp Warning

WARNING: When installing the device, do not use a ramp inclined at more than 10 degrees.

Waarschuwing Gebruik een oprijplaat niet onder een hoek van meer dan 10 graden.

Varoitus Älä käytä sellaista kaltevaa pintaa, jonka kaltevuus ylittää 10 astetta.

Attention Ne pas utiliser une rampe dont l'inclinaison est supérieure à 10 degrés.

Warnung Keine Rampen mit einer Neigung von mehr als 10 Grad verwenden.

Avvertenza Non usare una rampa con pendenza superiore a 10 gradi.

Advarsel Bruk aldri en rampe som heller mer enn 10 grader.

Aviso Não utilize uma rampa com uma inclinação superior a 10 graus.

¡Atención! No usar una rampa inclinada más de 10 grados

Varning! Använd inte ramp med en lutning på mer än 10 grader.

Related Documentation

- General Safety Guidelines and Warnings on page 105
- Installation Instructions Warning on page 113
- Grounded Equipment Warning on page 120

Rack-Mounting and Cabinet-Mounting Warnings

Ensure that the rack or cabinet in which the device is installed is evenly and securely supported. Uneven mechanical loading could lead to a hazardous condition.

WARNING: To prevent bodily injury when mounting or servicing the device in a rack, take the following precautions to ensure that the system remains stable. The following directives help maintain your safety:

- The device must be installed in a rack that is secured to the building structure.
- The device should be mounted at the bottom of the rack if it is the only unit in the rack.
- When mounting the device on a partially filled rack, load the rack from the bottom to the top with the heaviest component at the bottom of the rack.
- If the rack is provided with stabilizing equipment, install the stabilizers before mounting or servicing the device in the rack.

Waarschuwing Om lichamelijk letsel te voorkomen wanneer u dit toestel in een rek monteert of het daar een servicebeurt geeft, moet u speciale voorzorgsmaatregelen nemen om ervoor te zorgen dat het toestel stabiel blijft. De onderstaande richtlijnen worden verstrekt om uw veiligheid te verzekeren:

- De Juniper Networks switch moet in een stellage worden geïnstalleerd die aan een bouwsel is verankerd.
- Dit toestel dient onderaan in het rek gemonteerd te worden als het toestel het enige in het rek is.
- Wanneer u dit toestel in een gedeeltelijk gevuld rek monteert, dient u het rek van onderen naar boven te laden met het zwaarste onderdeel onderaan in het rek.
- Als het rek voorzien is van stabiliseringshulpmiddelen, dient u de stabilisatoren te monteren voordat u het toestel in het rek monteert of het daar een servicebeurt geeft.

Varoitus Kun laite asetetaan telineeseen tai huolletaan sen ollessa telineessä, on noudatettava erityisiä varotoimia järjestelmän vakavuuden säilyttämiseksi, jotta vältytään loukkaantumiselta. Noudata seuraavia turvallisuusohjeita:

- Juniper Networks switch on asennettava telineeseen, joka on kiinnitetty rakennukseen.
- Jos telineessä ei ole muita laitteita, aseta laite telineen alaosaan.
- Jos laite asetetaan osaksi täytettyyn telineeseen, aloita kuormittaminen sen alaosasta kaikkein raskaimmalla esineellä ja siirry sitten sen yläosaan.
- Jos telinettä varten on vakaimet, asenna ne ennen laitteen asettamista telineeseen tai sen huoltamista siinä.

Attention Pour éviter toute blessure corporelle pendant les opérations de montage ou de réparation de cette unité en casier, il convient de prendre des précautions spéciales afin de maintenir la stabilité du système. Les directives ci-dessous sont destinées à assurer la protection du personnel:

- Le rack sur lequel est monté le Juniper Networks switch doit être fixé à la structure du bâtiment.
- Si cette unité constitue la seule unité montée en casier, elle doit être placée dans le bas.
- Si cette unité est montée dans un casier partiellement rempli, charger le casier de bas en haut en plaçant l'élément le plus lourd dans le bas.
- Si le casier est équipé de dispositifs stabilisateurs, installer les stabilisateurs avant de monter ou de réparer l'unité en casier.

Warnung Zur Vermeidung von Körperverletzung beim Anbringen oder Warten dieser Einheit in einem Gestell müssen Sie besondere Vorkehrungen treffen, um sicherzustellen, daß das System stabil bleibt. Die folgenden Richtlinien sollen zur Gewährleistung Ihrer Sicherheit dienen:

- Der Juniper Networks switch muß in einem Gestell installiert werden, das in der Gebäudestruktur verankert ist.
- Wenn diese Einheit die einzige im Gestell ist, sollte sie unten im Gestell angebracht werden.
- Bei Anbringung dieser Einheit in einem zum Teil gefüllten Gestell ist das Gestell von unten nach oben zu laden, wobei das schwerste Bauteil unten im Gestell anzubringen ist.
- Wird das Gestell mit Stabilisierungszubehör geliefert, sind zuerst die Stabilisatoren zu installieren, bevor Sie die Einheit im Gestell anbringen oder sie warten.

Avvertenza Per evitare infortuni fisici durante il montaggio o la manutenzione di questa unità in un supporto, occorre osservare speciali precauzioni per garantire che il sistema rimanga stabile. Le seguenti direttive vengono fornite per garantire la sicurezza personale:

- Il Juniper Networks switch deve essere installato in un telaio, il quale deve essere fissato alla struttura dell'edificio.
- Questa unità deve venire montata sul fondo del supporto, se si tratta dell'unica unità da montare nel supporto.
- Quando questa unità viene montata in un supporto parzialmente pieno, caricare il supporto dal basso all'alto, con il componente più pesante sistemato sul fondo del supporto.
- Se il supporto è dotato di dispositivi stabilizzanti, installare tali dispositivi prima di montare o di procedere alla manutenzione dell'unità nel supporto.

Advarsel Unngå fysiske skader under montering eller reparasjonsarbeid på denne enheten når den befinner seg i et kabinett. Vær nøye med at systemet er stabilt. Følgende retningslinjer er gitt for å verne om sikkerheten:

- Juniper Networks switch må installeres i et stativ som er forankret til bygningsstrukturen.
- Denne enheten bør monteres nederst i kabinettet hvis dette er den eneste enheten i kabinettet.
- Ved montering av denne enheten i et kabinett som er delvis fylt, skal kabinettet lastes fra bunnen og opp med den tyngste komponenten nederst i kabinettet.
- Hvis kabinettet er utstyrt med stabiliseringsutstyr, skal stabilisatorene installeres før montering eller utføring av reparasjonsarbeid på enheten i kabinettet.

Aviso Para se prevenir contra danos corporais ao montar ou reparar esta unidade numa estante, deverá tomar precauções especiais para se certificar de que o sistema possui um suporte estável. As seguintes directrizes ajudá-lo-ão a efectuar o seu trabalho com segurança:

- O Juniper Networks switch deverá ser instalado numa prateleira fixa à estrutura do edificio.
- Esta unidade deverá ser montada na parte inferior da estante, caso seja esta a única unidade a ser montada.
- Ao montar esta unidade numa estante parcialmente ocupada, coloque os itens mais pesados na parte inferior da estante, arrumando-os de baixo para cima.
- Se a estante possuir um dispositivo de estabilização, instale-o antes de montar ou reparar a unidade.

¡Atención! Para evitar lesiones durante el montaje de este equipo sobre un bastidor, o posteriormente durante su mantenimiento, se debe poner mucho cuidado en que el sistema quede bien estable. Para garantizar su seguridad, proceda según las siguientes instrucciones:

- El Juniper Networks switch debe instalarse en un bastidor fijado a la estructura del edificio.
- Colocar el equipo en la parte inferior del bastidor, cuando sea la única unidad en el mismo.
- Cuando este equipo se vaya a instalar en un bastidor parcialmente ocupado, comenzar la instalación desde la parte inferior hacia la superior colocando el equipo más pesado en la parte inferior.
- Si el bastidor dispone de dispositivos estabilizadores, instalar éstos antes de montar o proceder al mantenimiento del equipo instalado en el bastidor.

Varning! För att undvika kroppsskada när du installerar eller utför underhållsarbete på denna enhet på en ställning måste du vidta särskilda

försiktighetsåtgärder för att försäkra dig om att systemet står stadigt. Följande riktlinjer ges för att trygga din säkerhet:

- Juniper Networks switch måste installeras i en ställning som är förankrad i byggnadens struktur.
- Om denna enhet är den enda enheten på ställningen skall den installeras längst ned på ställningen.
- Om denna enhet installeras på en delvis fylld ställning skall ställningen fyllas nedifrån och upp, med de tyngsta enheterna längst ned på ställningen.
- Om ställningen är försedd med stabiliseringsdon skall dessa monteras fast innan enheten installeras eller underhålls på ställningen.

Related Documentation

- General Safety Guidelines and Warnings on page 105
- Installation Instructions Warning on page 113
- Grounded Equipment Warning on page 120

Grounded Equipment Warning

WARNING: The device is intended to be grounded. During normal use, ensure that you have connected earth ground to the chassis.

Waarschuwing Deze apparatuur hoort geaard te worden Zorg dat de host-computer tijdens normaal gebruik met aarde is verbonden.

Varoitus Tämä laitteisto on tarkoitettu maadoitettavaksi. Varmista, että isäntälaite on yhdistetty maahan normaalikäytön aikana.

Attention Cet équipement doit être relié à la terre. S'assurer que l'appareil hôte est relié à la terre lors de l'utilisation normale.

Warnung Dieses Gerät muß geerdet werden. Stellen Sie sicher, daß das Host-Gerät während des normalen Betriebs an Erde gelegt ist.

Avvertenza Questa apparecchiatura deve essere collegata a massa. Accertarsi che il dispositivo host sia collegato alla massa di terra durante il normale utilizzo.

Advarsel Dette utstyret skal jordes. Forviss deg om vertsterminalen er jordet ved normalt bruk.

Aviso Este equipamento deverá estar ligado à terra. Certifique-se que o host se encontra ligado à terra durante a sua utilização normal.

¡Atención! Este equipo debe conectarse a tierra. Asegurarse de que el equipo principal esté conectado a tierra durante el uso normal.

Varning! Denna utrustning är avsedd att jordas. Se till att värdenheten är jordad vid normal användning.

Related Documentation

- General Safety Guidelines and Warnings on page 105
- AC Power Electrical Safety Guidelines on page 130
- *DC Power Electrical Safety Guidelines for Switches*

Maintenance and Operational Safety Guidelines and Warnings

While performing the maintenance activities for devices, observe the following guidelines and warnings:

- Battery Handling Warning on page 121
- Jewelry Removal Warning on page 122
- Lightning Activity Warning on page 123
- Operating Temperature Warning on page 124
- Product Disposal Warning on page 125

Battery Handling Warning

WARNING: Replacing a battery incorrectly might result in an explosion. Replace a battery only with the same or equivalent type recommended by the manufacturer. Dispose of used batteries according to the manufacturer's instructions.

Waarschuwing Er is ontploffingsgevaar als de batterij verkeerd vervangen wordt. Vervang de batterij slechts met hetzelfde of een equivalent type dat door de fabrikant aanbevolen is. Gebruikte batterijen dienen overeenkomstig fabrieksvoorschriften weggeworpen te worden.

Varoitus Räjähdyksen vaara, jos akku on vaihdettu väärään akkuun. Käytä vaihtamiseen ainoastaan saman- tai vastaavantyyppistä akkua, joka on valmistajan suosittelema. Hävitä käytetyt akut valmistajan ohjeiden mukaan.

Attention Danger d'explosion si la pile n'est pas remplacée correctement. Ne la remplacer que par une pile de type semblable ou équivalent, recommandée par le fabricant. Jeter les piles usagées conformément aux instructions du fabricant.

Warnung Bei Einsetzen einer falschen Batterie besteht Explosionsgefahr. Ersetzen Sie die Batterie nur durch den gleichen oder vom Hersteller empfohlenen Batterietyp. Entsorgen Sie die benutzten Batterien nach den Anweisungen des Herstellers.

Advarsel Det kan være fare for eksplosjon hvis batteriet skiftes på feil måte. Skift kun med samme eller tilsvarende type som er anbefalt av produsenten. Kasser brukte batterier i henhold til produsentens instruksjoner.

Avvertenza Pericolo di esplosione se la batteria non è installata correttamente. Sostituire solo con una di tipo uguale o equivalente, consigliata dal produttore. Eliminare le batterie usate secondo le istruzioni del produttore.

Aviso Existe perigo de explosão se a bateria for substituída incorrectamente. Substitua a bateria por uma bateria igual ou de um tipo equivalente recomendado pelo fabricante. Destrua as baterias usadas conforme as instruções do fabricante.

¡Atención! Existe peligro de explosión si la batería se reemplaza de manera incorrecta. Reemplazar la batería exclusivamente con el mismo tipo o el equivalente recomendado por el fabricante. Desechar las baterías gastadas según las instrucciones del fabricante.

Varning! Explosionsfara vid felaktigt batteribyte. Ersätt endast batteriet med samma batterityp som rekommenderas av tillverkaren eller motsvarande. Följ tillverkarens anvisningar vid kassering av använda batterier.

Jewelry Removal Warning

WARNING: Before working on equipment that is connected to power lines, remove jewelry, including rings, necklaces, and watches. Metal objects heat up when connected to power and ground and can cause serious burns or can be welded to the terminals.

Waarschuwing Alvorens aan apparatuur te werken die met elektrische leidingen is verbonden, sieraden (inclusief ringen, kettingen en horloges) verwijderen. Metalen voorwerpen worden warm wanneer ze met stroom en aarde zijn verbonden, en kunnen ernstige brandwonden veroorzaken of het metalen voorwerp aan de aansluitklemmen lassen.

Varoitus Ennen kuin työskentelet voimavirtajohtoihin kytkettyjen laitteiden parissa, ota pois kaikki korut (sormukset, kaulakorut ja kellot mukaan lukien). Metalliesineet kuumenevat, kun ne ovat yhteydessä sähkövirran ja maan kanssa, ja ne voivat aiheuttaa vakavia palovammoja tai hitsata metalliesineet kiinni liitäntänapoihin.

Attention Avant d'accéder à cet équipement connecté aux lignes électriques, ôter tout bijou (anneaux, colliers et montres compris). Lorsqu'ils sont branchés à l'alimentation et reliés à la terre, les objets métalliques chauffent, ce qui peut provoquer des blessures graves ou souder l'objet métallique aux bornes.

Warnung Vor der Arbeit an Geräten, die an das Netz angeschlossen sind, jeglichen Schmuck (einschließlich Ringe, Ketten und Uhren) abnehmen.

Metallgegenstände erhitzen sich, wenn sie an das Netz und die Erde angeschlossen werden, und können schwere Verbrennungen verursachen oder an die Anschlußklemmen angeschweißt werden.

Avvertenza Prima di intervenire su apparecchiature collegate alle linee di alimentazione, togliersi qualsiasi monile (inclusi anelli, collane, braccialetti ed orologi). Gli oggetti metallici si riscaldano quando sono collegati tra punti di alimentazione e massa: possono causare ustioni gravi oppure il metallo può saldarsi ai terminali.

Advarsel Fjern alle smykker (inkludert ringer, halskjeder og klokker) før du skal arbeide på utstyr som er koblet til kraftledninger. Metallgjenstander som er koblet til kraftledninger og jord blir svært varme og kan forårsake alvorlige brannskader eller smelte fast til polene.

Aviso Antes de trabalhar em equipamento que esteja ligado a linhas de corrente, retire todas as jóias que estiver a usar (incluindo anéis, fios e relógios). Os objectos metálicos aquecerão em contacto com a corrente e em contacto com a ligação à terra, podendo causar queimaduras graves ou ficarem soldados aos terminais.

¡Atención! Antes de operar sobre equipos conectados a líneas de alimentación, quitarse las joyas (incluidos anillos, collares y relojes). Los objetos de metal se calientan cuando se conectan a la alimentación y a tierra, lo que puede ocasionar quemaduras graves o que los objetos metálicos queden soldados a los bornes.

Varning! Tag av alla smycken (inklusive ringar, halsband och armbandsur) innan du arbetar på utrustning som är kopplad till kraftledningar. Metallobjekt hettas upp när de kopplas ihop med ström och jord och kan förorsaka allvarliga brännskador; metallobjekt kan också sammansvetsas med kontakterna.

Lightning Activity Warning

WARNING: Do not work on the system or connect or disconnect cables during periods of lightning activity.

Waarschuwing Tijdens onweer dat gepaard gaat met bliksem, dient u niet aan het systeem te werken of kabels aan te sluiten of te ontkoppelen.

Varoitus Älä työskentele järjestelmän parissa äläkä yhdistä tai irrota kaapeleita ukkosilmalla.

Attention Ne pas travailler sur le système ni brancher ou débrancher les câbles pendant un orage.

Warnung Arbeiten Sie nicht am System und schließen Sie keine Kabel an bzw. trennen Sie keine ab, wenn es gewittert.

Avvertenza Non lavorare sul sistema o collegare oppure scollegare i cavi durante un temporale con fulmini.

Advarsel Utfør aldri arbeid på systemet, eller koble kabler til eller fra systemet når det tordner eller lyner.

Aviso Não trabalhe no sistema ou ligue e desligue cabos durante períodos de mau tempo (trovoada).

¡Atención! No operar el sistema ni conectar o desconectar cables durante el transcurso de descargas eléctricas en la atmósfera.

Varning! Vid åska skall du aldrig utföra arbete på systemet eller ansluta eller koppla loss kablar.

Operating Temperature Warning

WARNING: To prevent the device from overheating, do not operate it in an area that exceeds the maximum recommended ambient temperature. To prevent airflow restriction, allow at least 6 in. (15.2 cm) of clearance around the ventilation openings.

Waarschuwing Om te voorkomen dat welke switch van de Juniper Networks router dan ook oververhit raakt, dient u deze niet te bedienen op een plaats waar de maximale aanbevolen omgevingstemperatuur van 40° C wordt overschreden. Om te voorkomen dat de luchtstroom wordt beperkt, dient er minstens 15,2 cm speling rond de ventilatie-openingen te zijn.

Varoitus Ettei Juniper Networks switch-sarjan reititin ylikuumentuisi, sitä ei saa käyttää tilassa, jonka lämpötila ylittää korkeimman suositellun ympäristölämpötilan 40° C. Ettei ilmanvaihto estyisi, tuuletusaukkojen ympärille on jätettävä ainakin 15,2 cm tilaa.

Attention Pour éviter toute surchauffe des routeurs de la gamme Juniper Networks switch, ne l'utilisez pas dans une zone où la température ambiante est supérieure à 40° C. Pour permettre un flot d'air constant, dégagez un espace d'au moins 15,2 cm autour des ouvertures de ventilations.

Warnung Um einen Router der switch vor Überhitzung zu schützen, darf dieser nicht in einer Gegend betrieben werden, in der die Umgebungstemperatur das empfohlene Maximum von 40° C überschreitet. Um Lüftungsverschluß zu verhindern, achten Sie darauf, daß mindestens 15,2 cm lichter Raum um die Lüftungsöffnungen herum frei bleibt.

Avvertenza Per evitare il surriscaldamento dei switch, non adoperateli in un locale che ecceda la temperatura ambientale massima di 40° C. Per evitare che la circolazione dell'aria sia impedita, lasciate uno spazio di almeno 15.2 cm di fronte alle aperture delle ventole.

Advarsel Unngå overoppheting av eventuelle rutere i Juniper Networks switch Disse skal ikke brukes på steder der den anbefalte maksimale omgivelsestemperaturen overstiger 40° C (104° F). Sørg for at klaringen rundt lufteåpningene er minst 15,2 cm (6 tommer) for å forhindre nedsatt luftsirkulasjon.

Aviso Para evitar o sobreaquecimento do encaminhador Juniper Networks switch, não utilize este equipamento numa área que exceda a temperatura máxima recomendada de 40° C. Para evitar a restrição à circulação de ar, deixe pelo menos um espaço de 15,2 cm à volta das aberturas de ventilação.

¡Atención! Para impedir que un encaminador de la serie Juniper Networks switch se recaliente, no lo haga funcionar en un área en la que se supere la temperatura ambiente máxima recomendada de 40° C. Para impedir la restricción de la entrada de aire, deje un espacio mínimo de 15,2 cm alrededor de las aperturas para ventilación.

Varning! Förhindra att en Juniper Networks switch överhettas genom att inte använda den i ett område där den maximalt rekommenderade omgivningstemperaturen på 40° C överskrids. Förhindra att luftcirkulationen inskränks genom att se till att det finns fritt utrymme på minst 15,2 cm omkring ventilationsöppningarna.

Product Disposal Warning

WARNING: Disposal of this device must be handled according to all national laws and regulations.

Waarschuwing Dit produkt dient volgens alle landelijke wetten en voorschriften te worden afgedankt.

Varoitus Tämän tuotteen lopullisesta hävittämisestä tulee huolehtia kaikkia valtakunnallisia lakeja ja säännöksiä noudattaen.

Attention La mise au rebut définitive de ce produit doit être effectuée conformément à toutes les lois et réglementations en vigueur.

Warnung Dieses Produkt muß den geltenden Gesetzen und Vorschriften entsprechend entsorgt werden.

Avvertenza L'eliminazione finale di questo prodotto deve essere eseguita osservando le normative italiane vigenti in materia

Advarsel Endelig disponering av dette produktet må skje i henhold til nasjonale lover og forskrifter.

Aviso A descartagem final deste produto deverá ser efectuada de acordo com os regulamentos e a legislação nacional.

¡Atención! El desecho final de este producto debe realizarse según todas las leyes y regulaciones nacionales

Varning! Slutlig kassering av denna produkt bör skötas i enlighet med landets alla lagar och föreskrifter.

Related Documentation

- General Safety Guidelines and Warnings on page 105
- General Electrical Safety Guidelines and Warnings on page 127
- AC Power Electrical Safety Guidelines on page 130
- *DC Power Electrical Safety Guidelines for Switches*
- *Laser and LED Safety Guidelines and Warnings*
- Installation Instructions Warning on page 113
- Grounded Equipment Warning on page 120

CHAPTER 20

Power and Electrical Safety Information

General Electrical Safety Guidelines and Warnings

WARNING: Certain ports on the device are designed for use as intrabuilding (within-the-building) interfaces only (Type 2 or Type 4 ports as described in *GR-1089-CORE*) and require isolation from the exposed outside plant (OSP) cabling. To comply with NEBS requirements and protect against lightning surges and commercial power disturbances, the intrabuilding ports *must not* be metallically connected to interfaces that connect to the OSP or its wiring. The intrabuilding ports on the device are suitable for connection to intrabuilding or unexposed wiring or cabling only. The addition of primary protectors is not sufficient protection for connecting these interfaces metallically to OSP wiring.

CAUTION: Before removing or installing components of a device, attach an electrostatic discharge (ESD) grounding strap to an ESD point and place the other end of the strap around your bare wrist. Failure to use an ESD grounding strap could result in damage to the device.

- Install the device in compliance with the following local, national, and international electrical codes:

  - United States—National Fire Protection Association (NFPA 70), United States National Electrical Code.
  - Other countries—International Electromechanical Commission (IEC) 60364, Part 1 through Part 7.
  - Evaluated to the TN power system.
  - Canada—Canadian Electrical Code, Part 1, CSA C22.1.
- Locate the emergency power-off switch for the room in which you are working so that if an electrical accident occurs, you can quickly turn off the power.
- Make sure that grounding surfaces are cleaned and brought to a bright finish before grounding connections are made.
- Do not work alone if potentially hazardous conditions exist anywhere in your workspace.
- Never assume that power is disconnected from a circuit. Always check the circuit before starting to work.
- Carefully look for possible hazards in your work area, such as moist floors, ungrounded power extension cords, and missing safety grounds.
- Operate the device within marked electrical ratings and product usage instructions.
- To ensure that the device and peripheral equipment function safely and correctly, use the cables and connectors specified for the attached peripheral equipment, and make certain they are in good condition.

You can remove and replace many device components without powering off or disconnecting power to the device, as detailed elsewhere in the hardware documentation for this device. Never install equipment that appears to be damaged.

Related Documentation

- General Safety Guidelines and Warnings on page 105
- AC Power Electrical Safety Guidelines on page 130
- *DC Power Electrical Safety Guidelines for Switches*

Action to Take After an Electrical Accident

If an electrical accident results in an injury, take the following actions in this order:

1. Use caution. Be aware of potentially hazardous conditions that could cause further injury.
2. Disconnect power from the device.
3. If possible, send another person to get medical aid. Otherwise, assess the condition of the victim, then call for help.

Related Documentation

- General Safety Guidelines and Warnings on page 105
- General Electrical Safety Guidelines and Warnings on page 127
- AC Power Electrical Safety Guidelines on page 130
- *DC Power Electrical Safety Guidelines for Switches*

Prevention of Electrostatic Discharge Damage

Device components that are shipped in antistatic bags are sensitive to damage from static electricity. Some components can be impaired by voltages as low as 30 V. You can easily generate potentially damaging static voltages whenever you handle plastic or foam packing material or if you move components across plastic or carpets. Observe the following guidelines to minimize the potential for electrostatic discharge (ESD) damage, which can cause intermittent or complete component failures:

- Always use an ESD grounding strap when you are handling components that are subject to ESD damage, and make sure that it is in direct contact with your skin.

  If a grounding strap is not available, hold the component in its antistatic bag (see Figure 21 on page 130) in one hand and touch the exposed, bare metal of the device with the other hand immediately before inserting the component into the device.

  WARNING: **For safety, periodically check the resistance value of the ESD grounding strap. The measurement must be in the range 1 through 10 Mohms.**

- When handling any component that is subject to ESD damage and that is removed from the device, make sure the equipment end of your ESD grounding strap is attached to the ESD point on the chassis.

  If no grounding strap is available, touch the exposed, bare metal of the device to ground yourself before handling the component.

- Avoid contact between the component that is subject to ESD damage and your clothing. ESD voltages emitted from clothing can damage components.

- When removing or installing a component that is subject to ESD damage, always place it component-side up on an antistatic surface, in an antistatic card rack, or in an antistatic bag (see Figure 21 on page 130). If you are returning a component, place it in an antistatic bag before packing it.

Figure 21: Placing a Component into an Antistatic Bag

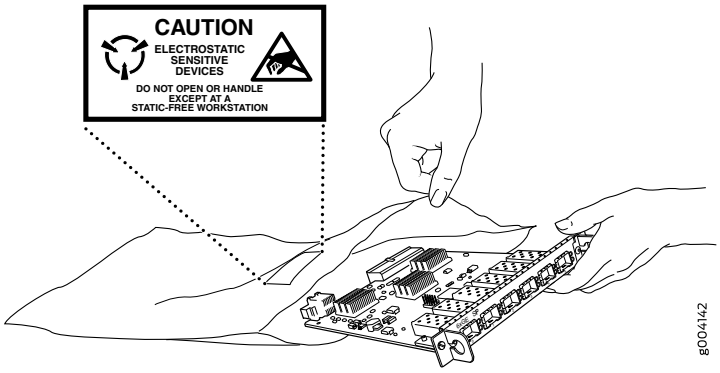

CAUTION: ANSI/TIA/EIA-568 cables such as Category 5e and Category 6 can get electrostatically charged. To dissipate this charge, always ground the cables to a suitable and safe earth ground before connecting them to the system.

Related Documentation

- General Safety Guidelines and Warnings on page 105

AC Power Electrical Safety Guidelines

CAUTION: For devices with AC power supplies, an external surge protective device (SPD) must be used at the AC power source.

The following electrical safety guidelines apply to AC-powered devices:

- Note the following warnings printed on the device:

  "**CAUTION:** THIS UNIT HAS MORE THAN ONE POWER SUPPLY CORD. DISCONNECT ALL POWER SUPPLY CORDS BEFORE SERVICING TO AVOID ELECTRIC SHOCK."

  "**ATTENTION:** CET APPAREIL COMPORTE PLUS D'UN CORDON D'ALIMENTATION. AFIN DE PRÉVENIR LES CHOCS ÉLECTRIQUES, DÉBRANCHER TOUT CORDON D'ALIMENTATION AVANT DE FAIRE LE DÉPANNAGE."

- AC-powered devices are shipped with a three-wire electrical cord with a grounding-type plug that fits only a grounding-type power outlet. Do not circumvent this safety feature. Equipment grounding must comply with local and national electrical codes.
- You must provide an external certified circuit breaker rated minimum 20 A in the building installation.

- The power cord serves as the main disconnecting device for the AC-powered device. The socket outlet must be near the AC-powered device and be easily accessible.
- For devices that have more than one power supply connection, you must ensure that all power connections are fully disconnected so that power to the device is completely removed to prevent electric shock. To disconnect power, unplug all power cords (one for each power supply).

Power Cable Warning (Japanese)

WARNING: The attached power cable is only for this product. Do not use the cable for another product.

注意

附属の電源コードセットはこの製品専用です。
他の電気機器には使用しないでください。

g017253

Related Documentation

- General Safety Guidelines and Warnings on page 105
- General Electrical Safety Guidelines and Warnings on page 127
- Multiple Power Supplies Disconnection Warning on page 132

AC Power Disconnection Warning

WARNING: Before working on the device or near power supplies, unplug all the power cords from an AC-powered device.

Waarschuwing Voordat u aan een frame of in de nabijheid van voedingen werkt, dient u bij wisselstroom toestellen de stekker van het netsnoer uit het stopcontact te halen.

Varoitus Kytke irti vaihtovirtalaitteiden virtajohto, ennen kuin teet mitään asennuspohjalle tai työskentelet virtalähteiden läheisyydessä.

Attention Avant de travailler sur un châssis ou à proximité d'une alimentation électrique, débrancher le cordon d'alimentation des unités en courant alternatif.

Warnung Bevor Sie an einem Chassis oder in der Nähe von Netzgeräten arbeiten, ziehen Sie bei Wechselstromeinheiten das Netzkabel ab bzw.

Avvertenza Prima di lavorare su un telaio o intorno ad alimentatori, scollegare il cavo di alimentazione sulle unità CA.

Advarsel Før det utføres arbeid på kabinettet eller det arbeides i nærheten av strømforsyningsenheter, skal strømledningen trekkes ut på vekselstrømsenheter.

Aviso Antes de trabalhar num chassis, ou antes de trabalhar perto de unidades de fornecimento de energia, desligue o cabo de alimentação nas unidades de corrente alternada.

¡Atención! Antes de manipular el chasis de un equipo o trabajar cerca de una fuente de alimentación, desenchufar el cable de alimentación en los equipos de corriente alterna (CA).

Varning! Innan du arbetar med ett chassi eller nära strömförsörjningsenheter skall du för växelströmsenheter dra ur nätsladden.

Related Documentation

- General Safety Guidelines and Warnings on page 105
- General Electrical Safety Guidelines and Warnings on page 127
- AC Power Electrical Safety Guidelines on page 130

Multiple Power Supplies Disconnection Warning

WARNING: For a device that has more than one power supply connection, you must ensure that all power connections are fully disconnected so that power to the device is completely removed.

Related Documentation

- General Safety Guidelines and Warnings on page 105
- General Electrical Safety Guidelines and Warnings on page 127
- AC Power Electrical Safety Guidelines on page 130
- *DC Power Electrical Safety Guidelines for Switches*

TN Power Warning

WARNING: The device is designed to work with a TN power system.

Waarschuwing Het apparaat is ontworpen om te functioneren met TN energiesystemen.

Varoitus Koje on suunniteltu toimimaan TN-sähkövoimajärjestelmien yhteydessä.

Attention Ce dispositif a été conçu pour fonctionner avec des systèmes d'alimentation TN.

Warnung Das Gerät ist für die Verwendung mit TN-Stromsystemen ausgelegt.

Avvertenza Il dispositivo è stato progettato per l'uso con sistemi di alimentazione TN.

Advarsel Utstyret er utfomet til bruk med TN-strømsystemer.

Aviso O dispositivo foi criado para operar com sistemas de corrente TN.

¡Atención! El equipo está diseñado para trabajar con sistemas de alimentación tipo TN.

Varning! Enheten är konstruerad för användning tillsammans med elkraftssystem av TN-typ.

Related Documentation

- General Safety Guidelines and Warnings on page 105
- General Electrical Safety Guidelines and Warnings on page 127
- Grounded Equipment Warning on page 120
- Multiple Power Supplies Disconnection Warning on page 132

CHAPTER 21

Agency Approvals and Compliance Statements

Agency Approvals for EX Series Switches

This topic applies to hardware devices in the EX Series product family, which includes EX Series switches, the EX Series Redundant Power System (RPS), and the XRE200 External Routing Engine.

These hardware devices comply with the following standards:

- Safety
  - CAN/CSA-C22.2 No. 60950-1 Information Technology Equipment
  - UL 60950-1 Information Technology Equipment
  - EN 60950-1 Information Technology Equipment
  - IEC 60950-1 Information Technology Equipment
  - EN 60825-1 Safety of Laser Products - Part 1: Equipment classification and requirements
- EMC
  - FCC 47CFR Part 15 Class A (USA)
  - EN 55022 Class A Emissions (Europe)
  - ICES-003 Class A
  - VCCI Class A (Japan)
  - AS/NZS CISPR 22 Class A (Australia/New Zealand)
  - CISPR 22 Class A
  - EN 55024
  - EN 300386

- EN 61000-3-2 Power Line Harmonics
- EN 61000-3-3 Voltage Fluctuations and Flicker
- EN 61000-4-2 ESD
- EN 61000-4-3 Radiated Immunity
- EN 61000-4-4 EFT
- EN 61000-4-5 Surge
- EN 61000-4-6 Low Frequency Common Immunity
- EN 61000-4-11 Voltage Dips and Sags

Related Documentation

- Compliance Statements for EMC Requirements for EX Series Switches on page 136
- Compliance Statements for Acoustic Noise for EX Series Switches on page 140

Compliance Statements for EMC Requirements for EX Series Switches

This topic applies to hardware devices in the EX Series product family, which includes EX Series switches, the EX Series Redundant Power System (RPS), and the XRE200 External Routing Engine.

This topic describes the EMC requirements for these hardware devices for:

Canada

This Class A digital apparatus complies with Canadian ICES-003.

Cet appareil numérique de la classe A est conforme à la norme NMB-003 du Canada.

The Industry Canada label identifies certified equipment. This certification means that the equipment meets certain telecommunications network protective, operational, and safety requirements. Industry Canada does not guarantee the equipment will operate to the users' satisfaction.

Before installing this equipment, users should ensure that it is permissible to connect the equipment to the facilities of the local telecommunications company. The equipment must also be installed using an acceptable method of connection. In some cases, the

inside wiring associated with a single line individual service can be extended by means of a certified connector assembly. The customer should be aware that compliance with the above conditions might not prevent degradation of service in some situations.

Repairs to certified equipment should be made by an authorized Canadian maintenance facility designated by the supplier. Any repairs or alterations made by the user to this equipment, or equipment malfunctions, might give the telecommunications company cause to request the user to disconnect the equipment.

CAUTION: **Users should not attempt to make electrical ground connections by themselves, but should contact the appropriate inspection authority or an electrician, as appropriate.**

Users should ensure for their own protection that the electrical ground connections of the power utility, telephone lines, and internal metallic water pipe system, if present, are connected together. This precaution might be particularly important in rural areas.

European Community

This is a Class A device. In a domestic environment this device might cause radio interference, in which case the user needs to take adequate measures.

Israel

אזהרה

מוצר זה הוא מוצר Class A.
בסביבה ביתית,מוצר זה עלול לגרום הפרעות בתדר רדיו,ובמקרה זה, המשתמש עשוי להידרש לנקוט אמצעים מתאימים.

Translation from Hebrew–Warning: This product is Class A. In residential environments, the product may cause radio interference, and in such a situation, the user may be required to take adequate measures.

Japan

この装置は、クラス A 情報技術装置です。この装置を家庭環境で使用すると電波妨害を引き起こすことがあります。この場合には使用者が適切な対策を講ずるよう要求されることがあります。 VCCI-A

The preceding translates as follows:

This is a Class A device. In a domestic environment this device might cause radio interference, in which case the user needs to take adequate measures.

VCCI-A

Korea

이 기기는 업무용(A급) 전자파적합기기로서 판매자 또는 사용자는 이 점을 주의하시기 바라며, 가정외의 지역에서 사용하는 것을 목적으로 합니다.

Korean Class A Warning g040913

The preceding translates as follows:

This equipment is Industrial (Class A) electromagnetic wave suitability equipment and seller or user should take notice of it, and this equipment is to be used in the places except for home

United States

The device has been tested and found to comply with the limits for a Class A digital device, pursuant to Part 15 of the FCC Rules. These limits are designed to provide reasonable protection against harmful interference when the equipment is operated in a commercial environment. This equipment generates, uses, and can radiate radio frequency energy and, if not installed and used in accordance with the instruction manual, might cause harmful interference to radio communications. Operation of this equipment in a residential area is likely to cause harmful interference, in which case users need to correct the interference at their own expense.

FCC Part 15 Statement

This equipment has been tested and found to comply with the limits for a Class A digital device pursuant to Part 15 of the FCC Rules. These limits are designed to provide reasonable protection against harmful interference in a residential installation. This equipment generates, uses, and can radiate radio frequency energy and, if not installed and used in accordance with the instructions, might cause harmful interference to radio communications. However, there is no guarantee that interference will not occur in a particular installation.

If this equipment does cause harmful interference to radio or television reception, which can be determined by turning the equipment off and on, the user is encouraged to try and correct the interference by one or more of the following measures:

- Reorient or relocate the receiving antenna.
- Increase the separation between the equipment and the receiver.
- Connect the equipment into an outlet on a circuit different from that to which the receiver is connected.
- Consult the dealer or an experienced radio or TV technician for help.

Nonregulatory Environmental Standards

NEBS compliance—These EX Series switches are Network Equipment Building System (NEBS) compliant:

- EX2200-24T and EX2200-48T
- EX3200-24T, EX3200-48T
- EX3300-24T, EX3300-48T
- EX4200-24T, EX4200-24F, EX4200-24F-S, EX4200-48T and EX4200-48T-S
- EX4300-24T, EX4300-24T-S, EX4300-24P, EX4300-24P-S, EX4300-32F, EX4300-32F-S, EX4300-48T, EX4300-48T-AFI, EX4300-48T-S, EX4300-48P, and EX4300-48P-S
- All EX4500 switches with AC power supplies
- EX4550-32T-AFO, EX4550-32T-AFI, EX4550-32F-AFO, EX4550-32F-AFI, and EX4550-32F-S
- EX4600-40F and EX4600-40F-S
- All EX6200 switches

  NOTE: **For the EX6200-48P line cards, the intrabuilding ports must use shielded intrabuilding cabling or wiring that is grounded at both ends.**

- All EX8200 switches

These switches meet the following NEBS compliance standards:

- SR-3580 NEBS Criteria Levels (Level 4 Compliance)
- GR-1089-CORE: EMC and Electrical Safety for Network Telecommunications Equipment
- GR-63-CORE: NEBS, Physical Protection
  - The equipment is suitable for installation as part of the Common Bonding Network (CBN).
  - The equipment is suitable for installation in locations where the National Electrical Code (NEC) applies.
  - The battery return connection is to be treated as an Isolated DC return (DC-I), as defined in GR-1089-CORE.

Related Documentation

- Agency Approvals for EX Series Switches on page 135
- Compliance Statements for Acoustic Noise for EX Series Switches on page 140

Compliance Statements for Acoustic Noise for EX Series Switches

This topic applies to hardware devices in the EX Series product family, which includes EX Series switches, the EX Series Redundant Power System (RPS), and the XRE200 External Routing Engine.

Maschinenlärminformations-Verordnung - 3. GPSGV, der höchste Schalldruckpegel beträgt 70 dB(A) oder weniger gemäss EN ISO 7779

Translation:

The emitted sound pressure is below 70 dB(A) per EN ISO 7779.

Related Documentation

- Agency Approvals for EX Series Switches on page 135
- Compliance Statements for EMC Requirements for EX Series Switches on page 136